Material Handling Robot

Submitted In Partial Fulfillment of Requirements

For the Degree Of

Bachelor in Technology

(Mechanical Engineering)

By

Atharva Srivastava

Roll No.: 16010520086

Saurabh Rane

Roll No.: 16010520089

Amod Zack

Roll No.: 16010520102

Guide

Prof. Parag Sarode

Somaiya Vidyavihar University

Vidyavihar, Mumbai - 400 077

2020-24

Somaiya Vidyavihar University

K. J. Somaiya College of Engineering

Certificate

This is to certify that the dissertation report entitled **Material Handling Robot** submitted by Atharva Srivastava (16010520086), Saurabh Rane (16010520089) and Amod Zack (16010520102) at the end of semester VIII of LY B. Tech is a bonafide record for partial fulfillment of requirements for the degree of Bachelors of Technology (Mechanical Engineering) in Somaiya Vidyavihar University.

Guide	Head of the Department

Principal

Date:

Place: Mumbai-77

K. J. Somaiya College of Engineering, Mumbai-77

(A constituent College Affiliated to Somaiya Vidyavihar University)

Certificate of Approval of Examiners

We certify that this dissertation report entitled **Material Handling Robot** is a bonafide record of project work done by Atharva Srivastava (16010520086), Saurabh Rane (16010520089) and Amod Zack (16010520102). This project is approved for the award of Bachelors in Technology Degree in Mechanical Engineering of Somaiya Vidyavihar University.

_____

Internal Examiner

_____

External Examiner

Date:

Place: Mumbai-77

Somaiya Vidyavihar University

K. J. Somaiya College of Engineering

DECLARATION

We declare that this written report submission represents the work done based on our and / or others' ideas with adequately cited and referenced the original source. We also declare that we have adhered to all principles of intellectual property, academic honesty, and integrity as we have not misinterpreted or fabricated or falsified any idea/data/fact/source/original work/ matter in my submission.

We understand that any violation of the above will be cause for disciplinary action by the college and may evoke the penal action from the sources which have not been properly cited or from whom proper permission is not sought.

Signature of the Student **Roll No.**	**Signature of the Student** **Roll No.**
Signature of the Student **Roll No.**	**Signature of the Student** **Roll No.**

Date:

Place: Mumbai-77

Abstract

This project report dives deep into how robots that handle materials, automated systems, and the Internet of Things (IoT) work together in many areas, focusing on their big effects in chemical and pharmaceutical industry. By mixing robots with IoT, this study investigates how they together boost work speed, change how people work, and make workplace much better. By looking through studies, real evidence, and hands-on tips, this work shines a light on how the joining of robots, automation, and IoT can really change things. Main points show big gains like more work done, lower costs for labor, and better ways to manage stuff. By making usual tasks automatic and using IoT to swap data and make choices fast, these systems finish tasks quicker, make work more reliable, and push for choices based on data in industries.

This report also takes a close look at the tech needed for making and using material handling robots, including easy microcontrollers, and different kinds of motors. With these reliable and flexible parts, the made robots are easy to use, making it simple to put them in and keep them up in many places. In the end, this report gives a full look at how using material handling robots, and the Internet of Things can really change scenarios. By showing how they work together to make operations smoother, work faster, and change the future of industries, this study helps lead the way for making smart choices and new ideas in today's world.

***Keywords*:** robot, material handling, chemical, pharmaceutical, internet of things, industries

Contents

List of Figures…….			i
List of Tables……			ii
Nomenclature…….....			iii
1	**Introduction**…….. .		1
	1.1	Background……...……...	1
	1.2	Motivation ……...	2
	1.3	Scope of the project …….	3
	1.4	Brief description of project undertaken……...	3
	1.5	Organization of the report……...	4
2	**Literature Survey**…….		5
3	**Project design** …….....		7
	3.1	Introduction…….	7
	3.2	Problem statement……...	8
	3.3	Objective…….	8
	3.4	Methodology…….……...	9
	3.5	Components…….……...	9
	3.6	Calculations…….……...	25
	3.7	System Design…….	29
4	**Implementation and experimentation….**…….		34
	4.1	Implementation…… .	34
	4.2	Testing…….	37
	4.3	Challenges faced…….	38
	4.4	Results and discussion…….	39
5	**Conclusions and Further work**…….…….....		41
	5.1	Conclusions…….	41
	5.2	Further work……	42
Bibliography …….			43
Acknowledgements……			44

List of Figures

1.1	A Basic Material Handling Equipment……...	2
1.2	An Industrial Robotic Manipulator…….	3
3.1	The Material Handling Robot…….	7
3.2	The Original CAD of the MHR…….…….	10
3.3	The MHR Drawing File …….	11
3.4	The Cart Drawing File…….	12
3.5	The Design of Plywood Framework……	13
3.6	Results of Structural Analysis of Cart…….	13
3.7	The Motor Wheel attached to the plywood…….	14
3.8	The Trolley Wheel attached to the plywood…….…….	15
3.9	The Design of the Robot Arm…….…	16
3.10	Laser Cutting of Parts…….....	16
3.11	The Drawing File of the Base Joint …….....	17
3.12	The Drawing File of Link 1…….....	18
3.13	The Drawing File of Link 2……. ..	18
3.14	The Drawing File of Link 3…….	19
3.15	The Gripper…….....	20
3.16	The SG90 Micro Servo Motor …….....	21
3.17	The Drawing File of SG90 Bracket……...	21
3.18	The NEMA 17 Stepper Motor…….	22

3.19	The NEMA 17 Coupling…….	23
3.20	NEMA 17 Motor Mount…….	23
3.21	3D Printing Process…….	24
3.22	A Test tube Stand…….	24
3.23	Apparatus used for handling …….….	25
3.24	Diagram of the 4 DOF arm…….	26
3.25	An Arduino UNO R3 microcontroller…….	30
3.26	A HC-05 Bluetooth module…….	30
3.27	A L293D motor driver…….	31
3.28	A L298N motor driver…….	31
3.29	Diagram of the circuit…….	32
3.30	Actual view of the circuit…….	32
3.31	The UI of the Bluetooth application…….....	33
4.1	The MHR lifts the test tube…….	38
4.2	Graphical analysis of parameters…….	40

List of Tables

3.1	BOM of the Design……...	11
3.2	The KPT of the arm……...	26
4.1	Major Challenges faced…….....	39
4.2	Results as observed from testing…….	40

Nomenclature

Industry 4.0	Fourth phase of industrial revolution
IoT	Internet of Things
IoRT	Internet of Robotics Things
R&D	Research and Development
MHR	Material Handling Robot
HC-05	Bluetooth Module
DOF	Degree of Freedom
NEMA	National Electrical Manufacturers Association
R3	Revolution 3
CAD	Computer-Aided Design
BOM	Bill of Materials
SS	Stainless Steel
MS	Mild Steel
RPM	Revolutions Per Minute
DC	Direct Current
SG90	Rating of Servo motor
3D	3 Dimensional
DH	Denavit-Hartenberg algorithm
θ	Joint angle

d	Joint distance
a	Link length
α	Link twist angle
T	Variable for arm matrix
k	Link number
w	Tool configuration vector
q	Joint angle for inverse kinematics
C	Cosine
S	Sine
τ	Torque
r	Radial distance
F	Force
IDE	Integrated Development Environment
IC	Integrated Circuit
L293D	Motor driver
L298N	Motor driver
UI	User interface
ESP	Wi-Fi enabled module

Chapter 1

Introduction

This chapter presents the introduction to the title of the project report called "Material Handling Robot" and discusses certain points, giving an overview of the topic.

1.1. Background

Material Handling is a concept used to describe the movement of materials, especially, raw goods from one point to another as per the process involved in the workplace. The movement is supposed to be covering a short distance only, as it is confined only in the space of the work. Over the years, this concept has developed itself with a vast usage of technology. Various equipment that are manual, semi- automated and automated have been used for the same. The concept also involves the control of materials, protection, storage throughout production, planning and control procedures. Devices such as cranes, conveyors, lifts, trolleys, and vehicles are material handling equipment.

Material handling has an important role to play in manufacturing and logistics. In almost every other industry, material handling equipment is used in some or the other way. This concept plays an important role in the chemical laboratories. Recently studies have found that there has been an increase in the amount of expenses related to logistics. These expenses are due to the inefficiencies in the supply chain operations in industrialized countries. As a result, the expenses have eventually become a significant percentage of the operating cost. A further lack of research has put this issue in a state of neglect. In recent times, some significant developments have surged to tackle the issue related to the state of material handling. This area is currently under R&D, where some researchers are proposing a new age scenario for the pharma industry. Overall, the industry is expanding rapidly with the introduction of technology. It is expected that certain problems that are discussed above will tend to be solved with the introduction of the concept of automation.

Fig. 1.1 A Basic Material Handling Equipment

1.2. Motivation

In the new phase of industrial revolution, Industry 4.0, focus has been given more on reducing the manual effort required in an industrial process. “Automation” has been the talk of the day, with every other industry wanting to introduce some type of automation in the production cycle. There have been certain developments in the coming years with Robotics being seen as the path to bring automation in the industry. This paper identifies the very same topic and discusses the concept of a “Material Handling Robot”. The introduction of robotic technology in manufacturing and other industries plays a key role in material handling. Automobile assembly lines have started using robotic manipulators to handle the assembly of a car. Mobile robots are used for moving objects in warehouses of e-commerce companies like Amazon. Companies such as Mitsubishi, Kawasaki, Amazon, FANUC, etc. have invested huge sums to work in this field. They have developed various models specifically for the purpose of material handling.

Fig. 1.2 An Industrial Robotic Manipulator

1.3. Scope of the Project

A similar type of concept pertaining to the research that has been done by us students, is discussed in this paper. For our final year project, we have developed a design of a material handling robot. With all the data that was available online, we came up with a design as per needs. The design of this robot is based on the requirements for material handling. We have restricted materials or objects, only to the apparatus used in the chemical or pharmaceutical laboratories. The robot has mobility as one of the features along with a robot arm. The control of this robot is done from the Bluetooth module as the devices used are derived from the concept of the Internet of Things (IoT). The report further gives more insights and details about the project.

1.4. Brief Description of the Project Undertaken

The project is rather a simple representation of a vast concept that is currently shaping various industries. Automation is described as a new industrial revolution concept that will be used in various industries in coming years. With the research that was available on the topic “Material Handling Robot”, our focus was to design and build a robot that will handle material precisely and help it transport in its desired workplace. In accordance with what our Project Guide described as a robot for this purpose, we developed a robot that will have a robotic manipulator, handling equipment and wireless control. Throughout the project, the limitations that occurred shaped our design. Moreover, to make it more specific, we decided to make it in terms of the workplace of laboratories, something that was advantageous when it came to the criteria of weight constraints.

Lastly, we put an ample amount of time into ensuring that the robot serves its purpose and leaves a possibility for expansion in other industries in the near future.

1.5. Organization of the Report

The overall report is a deep insight into our final year project topic “Material Handling Robot”. This report presents our work in various parts and chapters, containing all the work that has been done with regards to the project topic. The various chapters in the report are described as follows:

Chapter 1: The current chapter is an overview of the project that describes the background as well as motivation behind this project.

Chapter 2: This chapter is a summary of the literature that has been referred to describe the objectives of this project.

Chapter 3: Here the entire design of the project has been showcased with every small detail that was used.

Chapter 4: The chapter describes the testing phase of the project along with results.

Chapter 5: The concluding chapter of this project report that also discusses the further work that can be done with regards to this project topic.

To summarize, this project is a first step to a greater concept. The report showcases deep insights into how we have developed a robot that can be used to handle material in a specific industry. Our project work promises to make the material handling process automated and efficient with precise usage of the equipment. This chapter presents only the background and related topics, the next chapter discusses the literature referred for this project.

Chapter 2

Literature Review

This chapter briefs about the literature that has been studied related to the given project topic.

2.1. Acceptance of Internet of Things (IoT)

The Internet of Things (IoT) represents a growing field with unlimited potential applications, albeit with huge challenges. Despite these obstacles, businesses are forced to embrace this paradigm shift to modernize their practices and increase productivity. Stina Nylander et al. [5] examine the multifaceted challenges posed by IoT adoption from changing customer-provider relationships to significant new business models and highlight the need for a deeper understanding of IoT ecosystems of the living system and emphasize the easy addition of materials to this dynamic landscape. Another barrier to skill diversity is the requirement for collaboration across disciplines. Nylander et. al. advocates a holistic approach to IoT, one that goes beyond mere technical considerations to incorporate broader organizational and policy requirements. The concept of IoT in the current date is being integrated at various fronts of technological advancements. One such technology is that of Robotics. Eze [7] presents a survey that explores the new concept of Internet of Robotics Things (IoRT). It is an integration of the erstwhile IoT and Robotics that has a promising future for certain applications. Villa et al. [9] give further insights regarding IoRT, discussing the current trends, applications, challenges and future of this new development. *Such a comprehensive approach is essential for companies seeking success in the IoT era, and emphasizes the importance of preparedness in various aspects to effectively meet its challenges.*

2.2. Implementation of Automation in Material Handling Systems

The integration of automation in material handling emerges as a pivotal strategy to address challenges while driving efficiency across industries. Ponis and Efthymiou [10] discuss applications of cloud and IoT in material handling automation, giving insights about the limited research that has been done on this topic and identify the shortcomings related to the concept. Despite potential technological barriers, industries increasingly recognize automation's value proposition. L. Jack Bradt et al. [4] advocate for flexible manufacturing systems wherein

workstations operate seamlessly under computer control, promising heightened efficiency. Dingbang Lu et al. [2] emphasize efficiency gains and labor cost reductions through an intelligent material handling robot, adept at navigating industrial environments autonomously or via manual control. Additionally, R. Kolluru et al. [3] present an analytical model for a robotic gripper specialized in handling limp materials, showcasing the adaptability of automation to address specific challenges. *Overall, the adoption of automation in material handling represents not just a possibility but a strategic imperative, offering transformative potential to enhance operational efficiency and adaptability.*

2.3. Robotics Technology in Healthcare

In the vast landscape of healthcare, there are numerous opportunities to streamline tasks and alleviate the burden on healthcare professionals, particularly in areas like material handling, which often consume valuable time and effort. Concepts such as IoT and Robotics are said to be transforming the sector of healthcare as discussed by Pradhan et al. [8]. This study also proposes the working of an IoT-aided robotic system and its applications in the field of healthcare. Bhosekar et al. [1] propose a thoughtful model aimed at implementing automated material handling facilities within hospitals. Their plan represents a significant stride toward introducing robotics into an industry that has traditionally relied heavily on manual processes, addressing key challenges prevalent in healthcare settings. This initiative aligns with broader efforts across various research endeavors to integrate robotics into healthcare. Rae Yule Kim et al. [6] emphasize the multifaceted role of robots, not only aiding in surgical procedures but also aiding healthcare professionals in other realms. *Thus, the emergence of robotics in healthcare is a promising frontier, with intensive testing and development to expand its functionality and effectiveness soon.*

This literature review presents a brief overview of the research that was available on this topic. As described earlier, this topic is still in emergence and very little research was available for the same. Moreover, automation is still in research for the healthcare sector. Despite these challenges, we were able to work on this topic and managed to develop a “Material Handling Robot”. To conclude, this chapter focuses only on the literature survey that was conducted. The next chapter is about the project design.

Chapter 3

Project Design

This chapter presents the project design of the selected project topic.

3.1. Introduction

The Material Handling Robot in simple words can be described as a robot arm placed on a cart-like mobile body that moves using wheels. The basic purpose of this robot is to handle and transport lightweight objects or apparatus such as test tubes, beakers, flasks, etc. that are generally found in laboratories. This is the sole reason why this robot has been designed for application in the laboratories. The robot is part of the first step to introduce automation in material handling. It simply performs the pick and place operation essential in material handling. With emerging technologies like IoT, the use of Arduino microcontroller, Bluetooth, etc. the robot can also be operated using an Android smartphone with the programming behind this robot enabling wireless connectivity. Such technologies are part of the new phase of the Industrial Revolution called Industry 4.0. This robot does have a scope to improve itself, with its application in other industries as well.

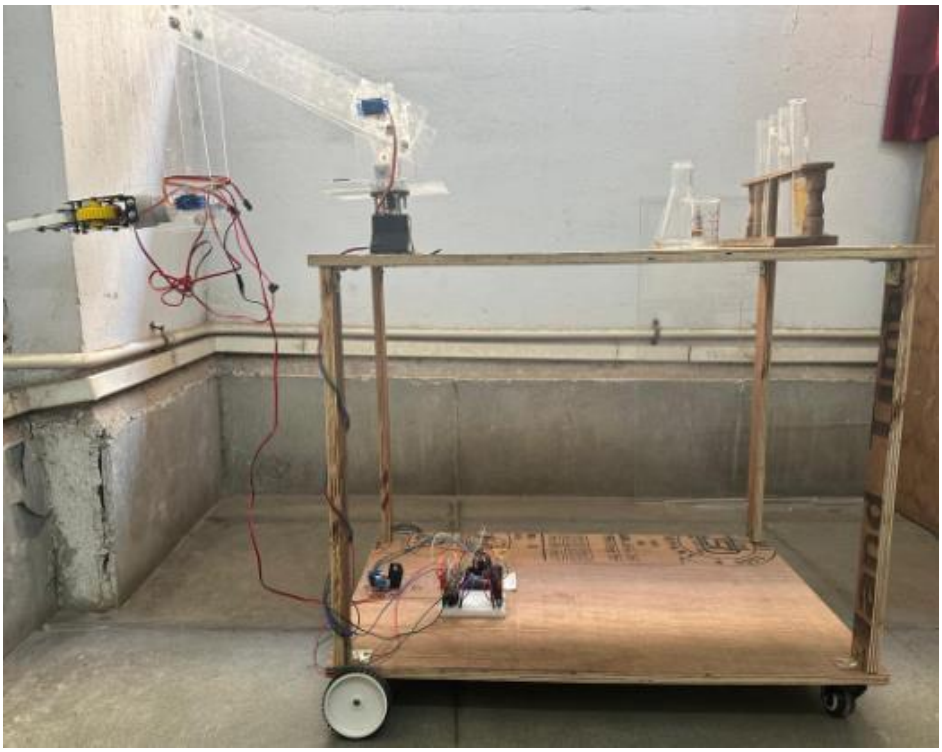

Fig. 3.1 The Material Handling Robot

3.2. Problem Statement

In the new era of Industry 4.0, the emergence of the concept of automation has been a big achievement. Its applications in various industries have shown fruitful results. Robotics has means by which automation can be introduced in these industries. Using robots to perform tasks such as handling of materials can increase efficiency, reduce costs, and time consumption along with creation of a better work environment. The aim here is to design and implement an efficient material handling robot to optimize logistics and streamline operations in industrial settings like laboratories and similar facilities. The robot should be capable of navigating through dynamic environments, accurately identifying and picking up various items of different shapes, sizes, and with certain weights, and transporting them to specified locations with minimal human intervention except the one related to control of the robot. Additionally, the robot should prioritize safety, adaptability, and scalability, while also considering cost-effectiveness and ease of integration with existing systems.

3.3. Objective

Owing to the research that was conducted on this project topic, we decided to frame some objectives that serve our purpose. Since, this is a topic still under R&D, not much work is available related to robots used in healthcare for material handling, except for certain proposals. This has led us to draw objectives that suit our goals for this project. The various objectives of this project can be summarized as follows:

- To build a material handling robot (MHR) that will handle materials such as test tubes and similar apparatuses.
- To design an arm for the robot that will manipulate the materials by performing pick and place operations.
- To create a mobile body for the robot with a cart-like structure that has wheels and will transport the material.
- To synchronize motion and simulate robot using a Bluetooth (HC-05) module, operating via a smartphone.

3.4. Methodology

The project methodology focused on extensive research of MHRs and their applications. Our main objective is to build a simple but effective robot, embedded to match the transformative capabilities of robots in industrial settings. The robot makes use of IoT related features to adapt to the new age of industrial revolution. Thus, the robot brings about a paradigm shift that gradually transforms manual labor into mechanization.

The selection of parts was mostly based on availability in the market and assumptions. For instance, plywood was selected to build the robot body because of its ease of manufacturing. Similarly, acrylic was chosen to build arm as it was planned to build a simple robot arm that will only pick up light weight material. The selected motors were considered for they were easily available in the market plus they offered the specifications that suited our purpose. Budget was also considered in this matter and thus our decisions were based on these conditions.

The design phase of the robot involved research studies, online resources, and informative videos, culminating in the selection of a system that perfectly meets the needs of our project, especially our choice of robot model. These modifications are optimized to handle laboratory apparatus, making them particularly suitable for applications in the respective environment. Various designs were considered for this purpose and here the aim was to reduce the complexity that might be involved. Eventually a design of MHR was finalized and approved from the college faculty. The robotic design readily to handles and transports materials according to specific requirements, and shows that it can be an asset to increase efficiency and accuracy in such scenarios.

3.5. Components

The development of a specialized material handling robot for healthcare environments involves extensive design work. After the research, a proposed design has been crafted to meet the unique demands of handling medical instruments and chemical laboratory apparatuses. The envisioned robot features a streamlined structure comprising three main components: a mobile body, a dedicated handling equipment, and a robot arm with a four-degree-of-freedom (DOF) model and a two-claw motorized gripper as the end effector. Controlled by a NEMA 17 stepper motor and servo motors, the arm is attached upright to the mobile body, which is equipped with four wheels—two motor-operated at the front and two trolley wheels at the rear. A tray positioned above the cart serves as the handling equipment for transporting objects. The entire assembly operates under the principles of the Internet of Things (IoT), with an Arduino UNO R3 board as the central control unit. Bluetooth connectivity enables remote control, utilizing a device like a smartphone as a teaching pendant. Despite limitations on weight capacity for both the arm and the robot body,

these constraints are intentional to ensure optimal functionality within the specified environment. The simplicity of the design enhances the robot's efficiency in executing tasks, making it a tailored solution for material handling in healthcare settings. The proposed model integrates these considerations, offering a comprehensive solution for effective and precise handling of materials in a healthcare context.

As mentioned earlier, the design of the robot can basically be divided into three parts. The entire assembly consists of a mobile body, handling equipment and robot arm. The arm is attached upright on the body, along with the stepper motor at the base. The body has wheels at all its ends that impart movement to the robot. Further, the handling equipment, in this case a tray can be seen behind the arm. The tray here consists of the glass apparatus, which are the material to be handled. The figure given below is the representation of the original design of the MHR that was created after the research and considering other factors. The brief description of each component or mechanism used in this process is given as follows:

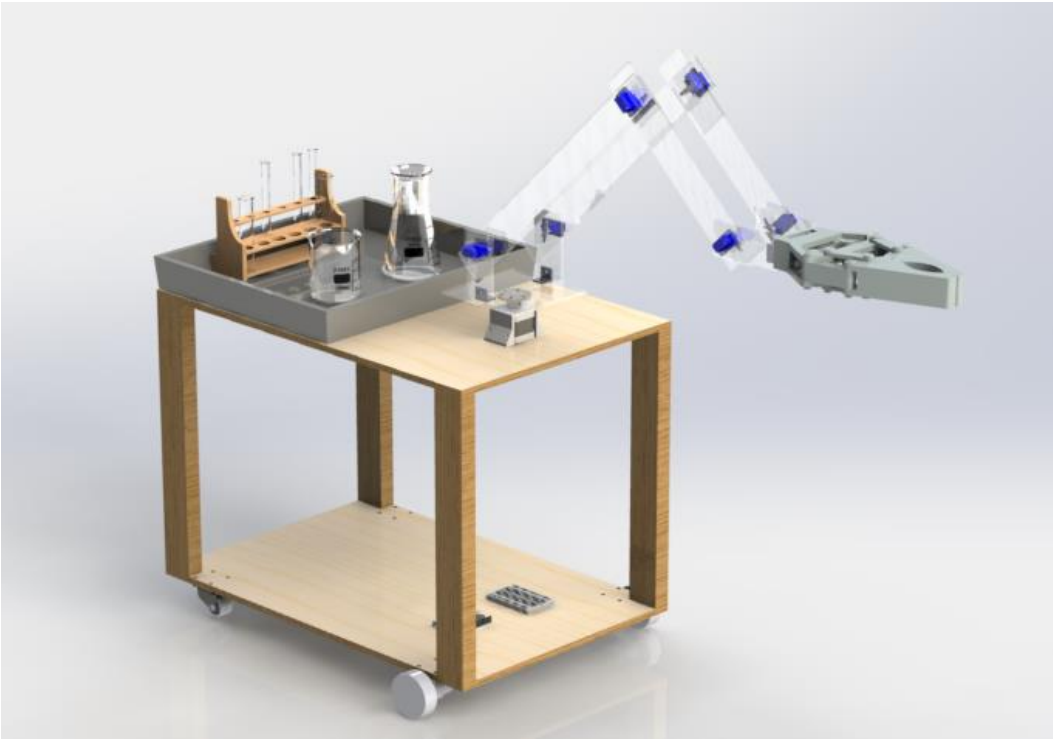

Fig. 3.2 The Original CAD of the MHR

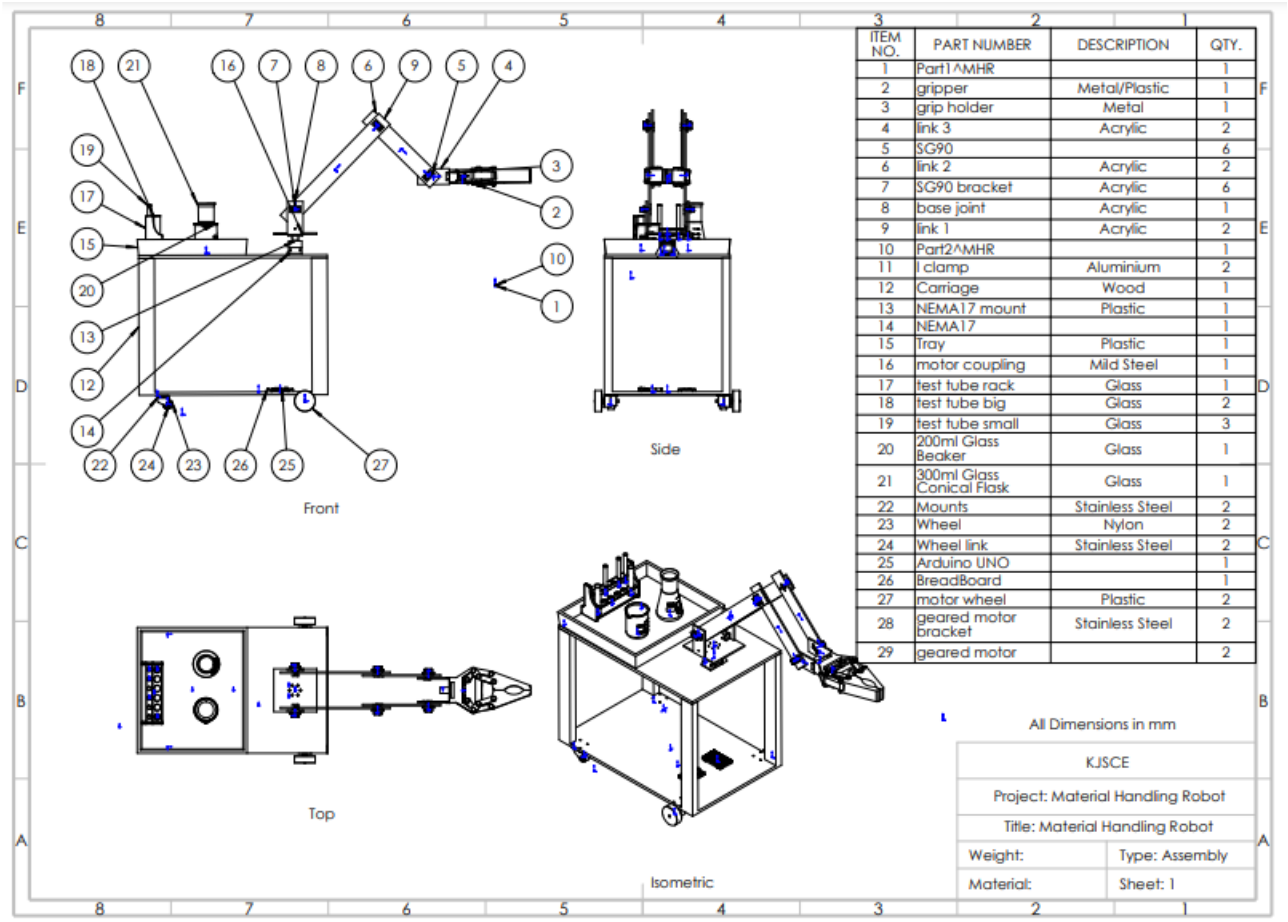

ITEM NO.	PART NUMBER	DESCRIPTION	QTY.
1	Part1^MHR		1
2	gripper	Metal/Plastic	1
3	grip holder	Metal	1
4	link 3	Acrylic	2
5	SG90		6
6	link 2	Acrylic	2
7	SG90 bracket	Acrylic	6
8	base joint	Acrylic	1
9	link 1	Acrylic	2
10	Part2^MHR		1
11	l clamp	Aluminium	2
12	Carriage	Wood	1
13	NEMA17 mount	Plastic	1
14	NEMA17		1
15	Tray	Plastic	1
16	motor coupling	Mild Steel	1
17	test tube rack	Glass	1
18	test tube big	Glass	2
19	test tube small	Glass	3
20	200ml Glass Beaker	Glass	1
21	300ml Glass Conical Flask	Glass	1
22	Mounts	Stainless Steel	2
23	Wheel	Nylon	2
24	Wheel link	Stainless Steel	2
25	Arduino UNO		1
26	BreadBoard		1
27	motor wheel	Plastic	2
28	geared motor bracket	Stainless Steel	2
29	geared motor		2

Fig. 3.3 The MHR Drawing File

Table 3.1 BOM of the Design

Item No.	Part Name	Description	Quantity
1	Cart	Wood	1
2	Wheel	Plastic	2
3	DC gear motor	Electronics	2
4	Trolley Wheel	SS/Nylon	2
5	Motor bracket	SS	2
6	L clamp	Aluminum	2
7	Link 1	Acrylic	2
8	Link 2	Acrylic	2
9	Link 3	Acrylic	2
10	Base	Acrylic	1
11	Gripper with motor	Metal/Plastic	1

12	SG90 Micro servo	Plastic/Electronic	6
13	NEMA 17 Stepper motor	Metal	1
14	NEMA 17 mount	Plastic	1
15	NEMA 17 coupling	MS	1
16	Test tube stand	Wood	1
17	Test tubes & Glassware	Glass	1

3.5.1. Mobile Body/Cart

The mobile body is a framework made entirely of plywood in this case. It carries the entire assembly of the upon itself on one end while the handling equipment is present on the other end. It also has the circuit located in between the two plyboards that is the sole way a robot can be operated. Below the body, wheels are attached at all ends of the ply board. In front are attached the motor wheels that use a 1000 RPM DC gear motor for rotation and forward or backward movement. The wheels present behind are simple light duty trolley wheels that are used as support to the body. The motor wheels in the front provide power for movement of the robot. A further deep study of the parts is given as follows:

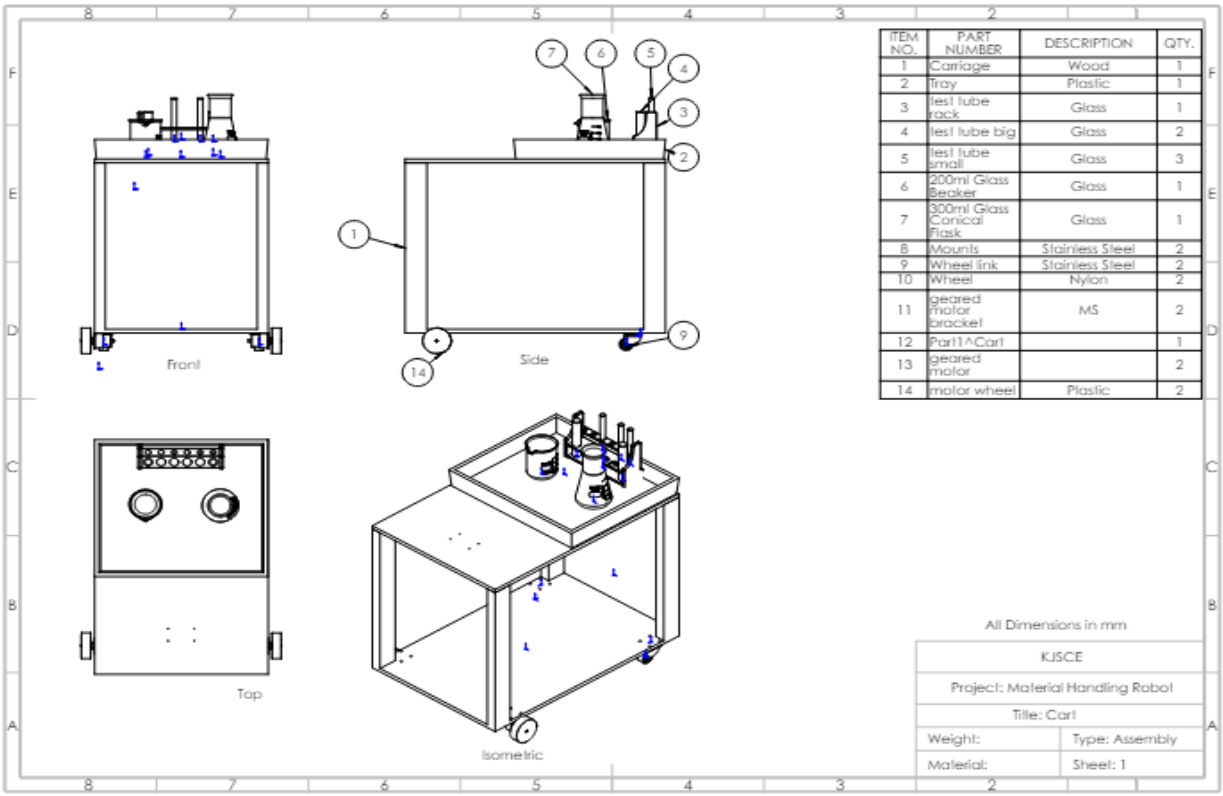

ITEM NO.	PART NUMBER	DESCRIPTION	QTY.
1	Carriage	Wood	1
2	Tray	Plastic	1
3	test tube rack	Glass	1
4	test tube big	Glass	2
5	test tube small	Glass	3
6	200ml Glass Beaker	Glass	1
7	300ml Glass Conical Flask	Glass	1
8	Mounts	Stainless Steel	2
9	Wheel link	Stainless Steel	2
10	Wheel	Nylon	2
11	geared motor bracket	MS	2
12	Part1^Cart		1
13	geared motor		2
14	motor wheel	Plastic	2

Fig. 3.4 The Cart Drawing File

A. Plywood Framework

The plywood forms the framework of MHR. The reason behind the use of plywood for this project is that it has better stress handling properties. The ply structure can handle a bending stress effectively, with other parts such as arm and tray being placed upon the robot body. Further, with a carpentry facility that was available in our college, we managed to cut the plywood into the required structure. A 10 mm thick ply was used in this project.

Fig. 3.5 The Design of Plywood Framework

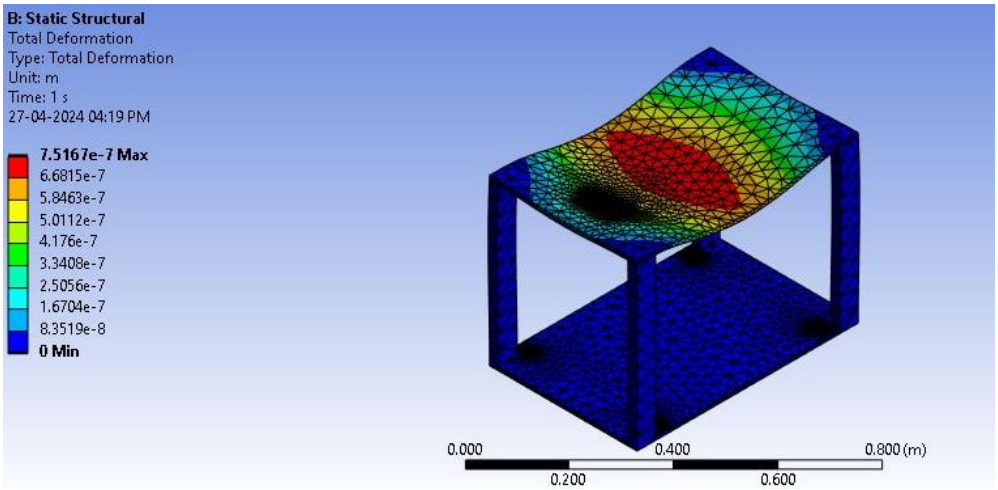

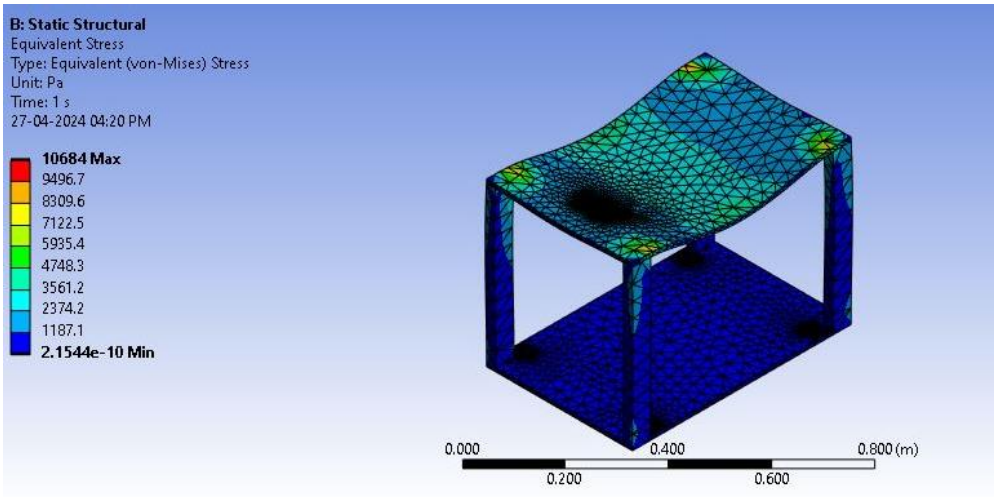

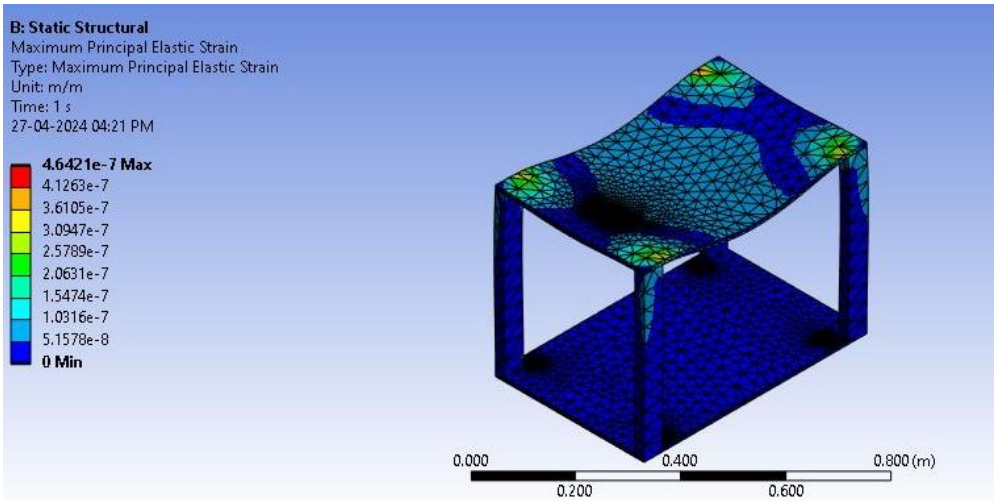

Fig. 3.6 Results of Structural Analysis of Cart

B. Motor Wheels

The motor wheels are attached below the plywood in the front side of the robot body. They provide the power for robot movement. The wheels used here are made of plastic that can be fixed on the motor shaft with a bolt. The two motors used here are a 1000 RPM DC gear motor. It is attached to the ply with a motor bracket that was available with the motor. It runs on a 12V supply and provides enough speed to move the robot. After the trail run conducted on the robot, this was the motor that was finalized for our purpose.

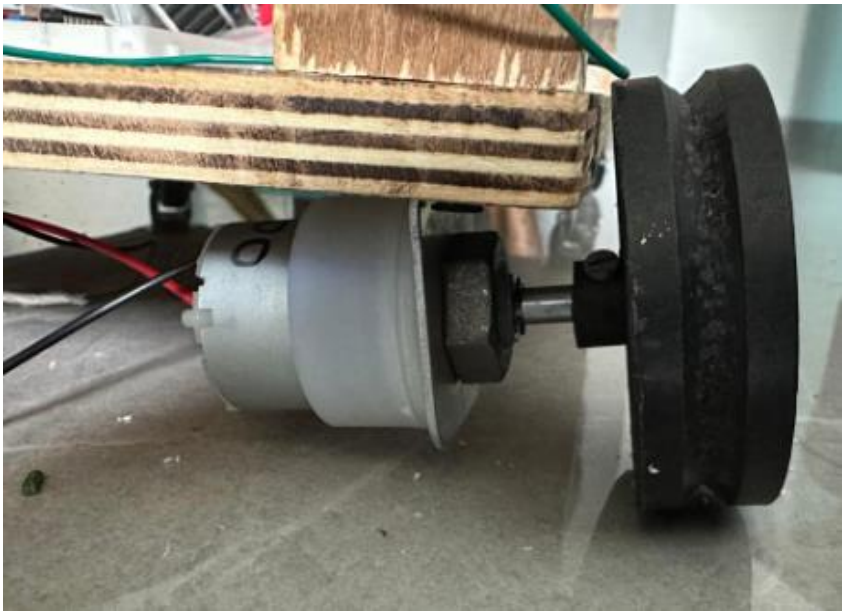

Fig. 3.7 The Motor Wheel attached to the plywood

C. Trolley Wheels

The two trolley wheels are attached to the plywood only for support purposes. It balances the rest of the rest of the robot body by providing movement and support from the backside. These wheels are used for the push and pull effect that the robot will undergo at the time of movement. The type used here is the one used for light duty with nylon as the material of wheels. Otherwise, these wheels suit best for our purpose when it comes to handling the weight.

Fig. 3.8 The Trolley Wheel attached to the plywood

3.5.2. Robot Arm

As the function of the robot is simple, so is the structure of the robot arm. It is a 4 DOF arm that can be used to perform the pick and place operation. It has links, joints, and an end effector as per the theory described for robotic manipulators. The robot arm was made of the parts that were available in the market. Acrylic was finalized as the material for the robot as it is a strong, tough, and lightweight material. Furthermore, the laser cutting facility available at the college was cheap and good enough to cut the parts for the arm. The structural analysis of the arm too showed promising results.

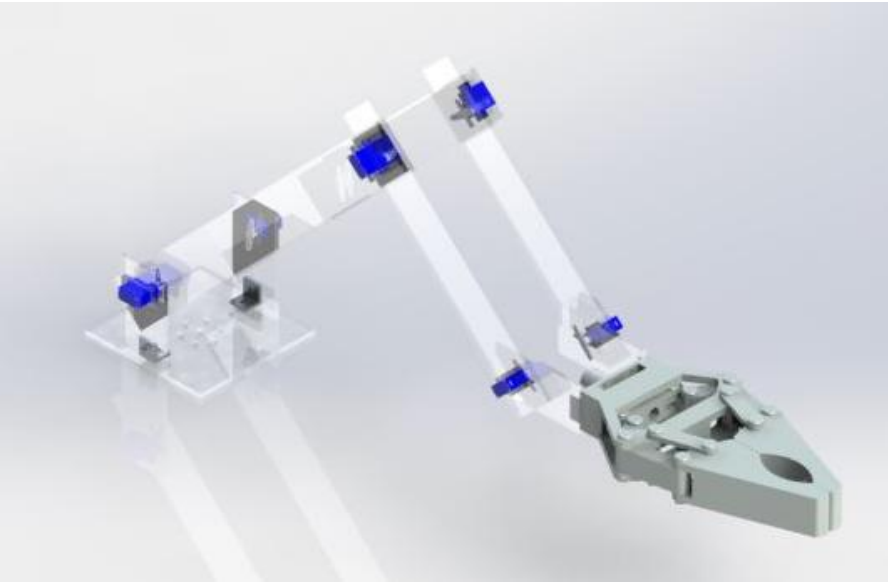

Fig. 3.9 The Design of the Robot Arm

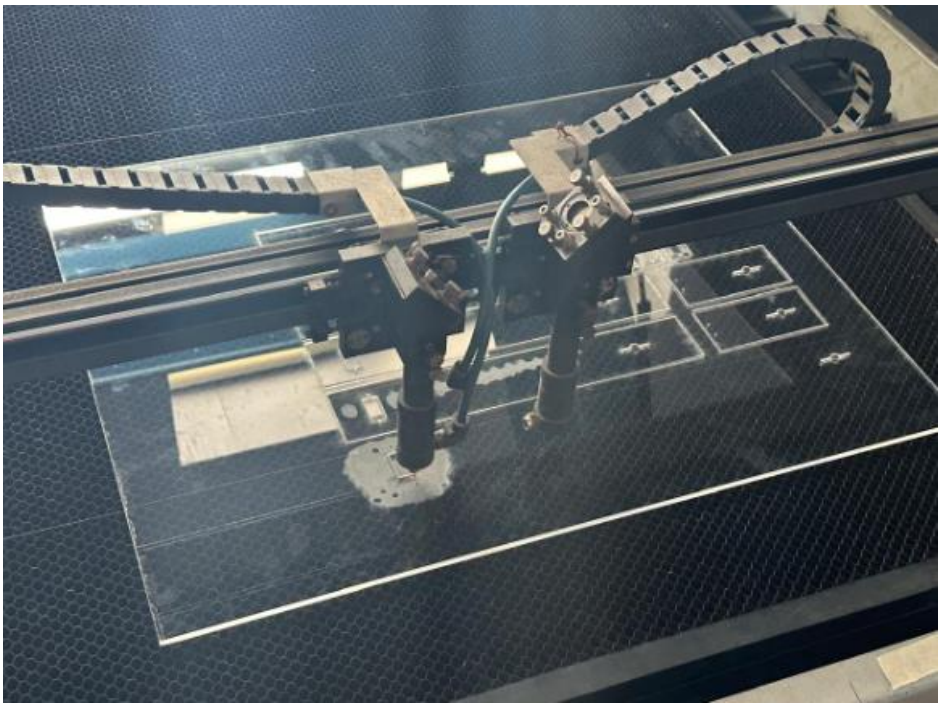

Fig. 3.10 Laser Cutting of Parts

A. Base

The base forms the first joint of the robot arm. It is a flat piece placed parallel to the surface along with two side extensions attached to it at opposite ends using the aluminum l-clamps of ½ inch each. This piece marks the beginning of the arm with the rest of the pieces attached as the assembly progresses. This piece is attached to a stepper motor from a coupling, about which will be discussed in the coming sections.

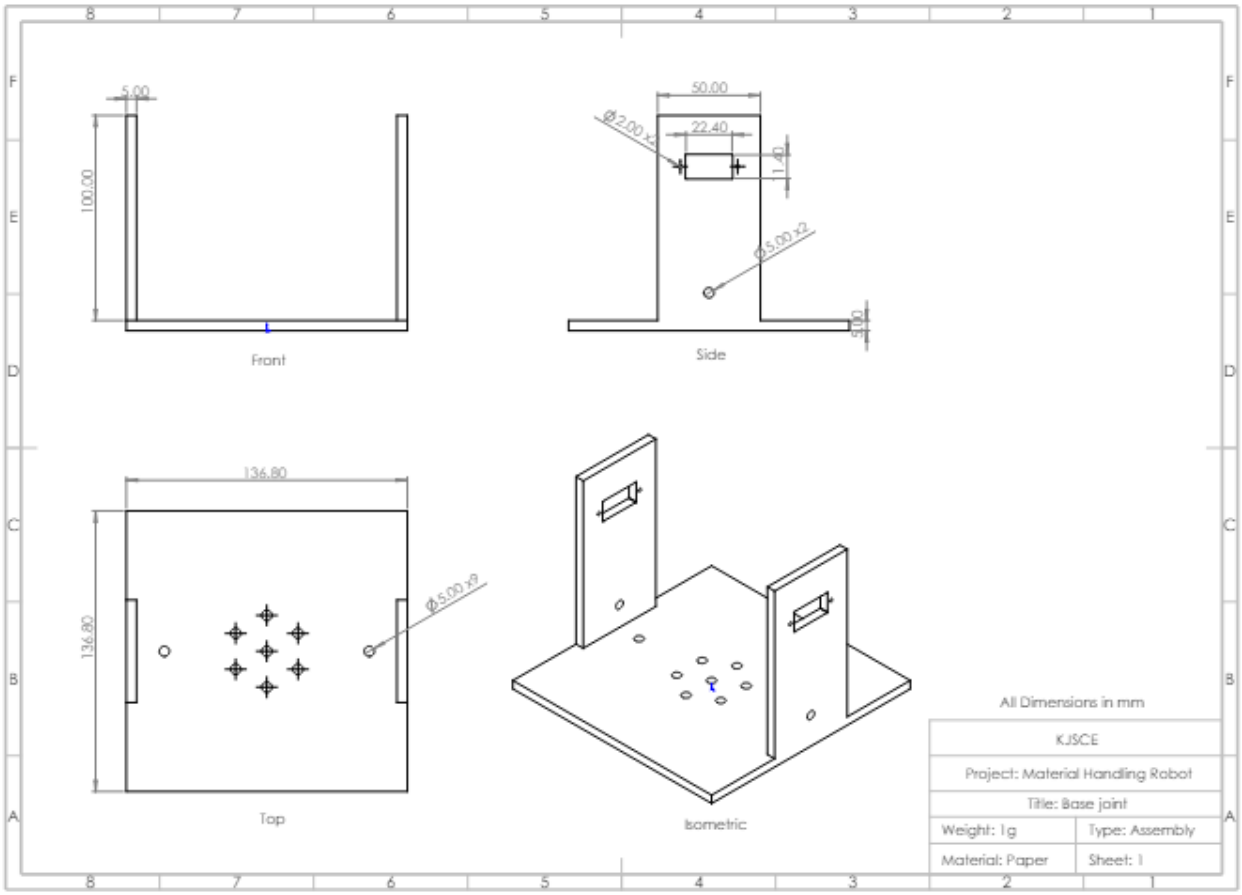

Fig. 3.11 The Drawing File of the Base Joint

B. Links

The links are the remaining pieces that form the robot arm. They are flat pieces of acrylic that have been cut in pairs. They have been named as “Link 1”, “Link 2” and “Link 3”. They are arranged in such a way that one link in one pair is parallel to the other in the same pair. Respective lengths have been selected to define the reach and the stroke of the arm. Reach is the measure of how far a robotic arm can reach when completely outstretched and stroke is the total radial distance traveled by the robot wrist. In this manner, the links have been designed.

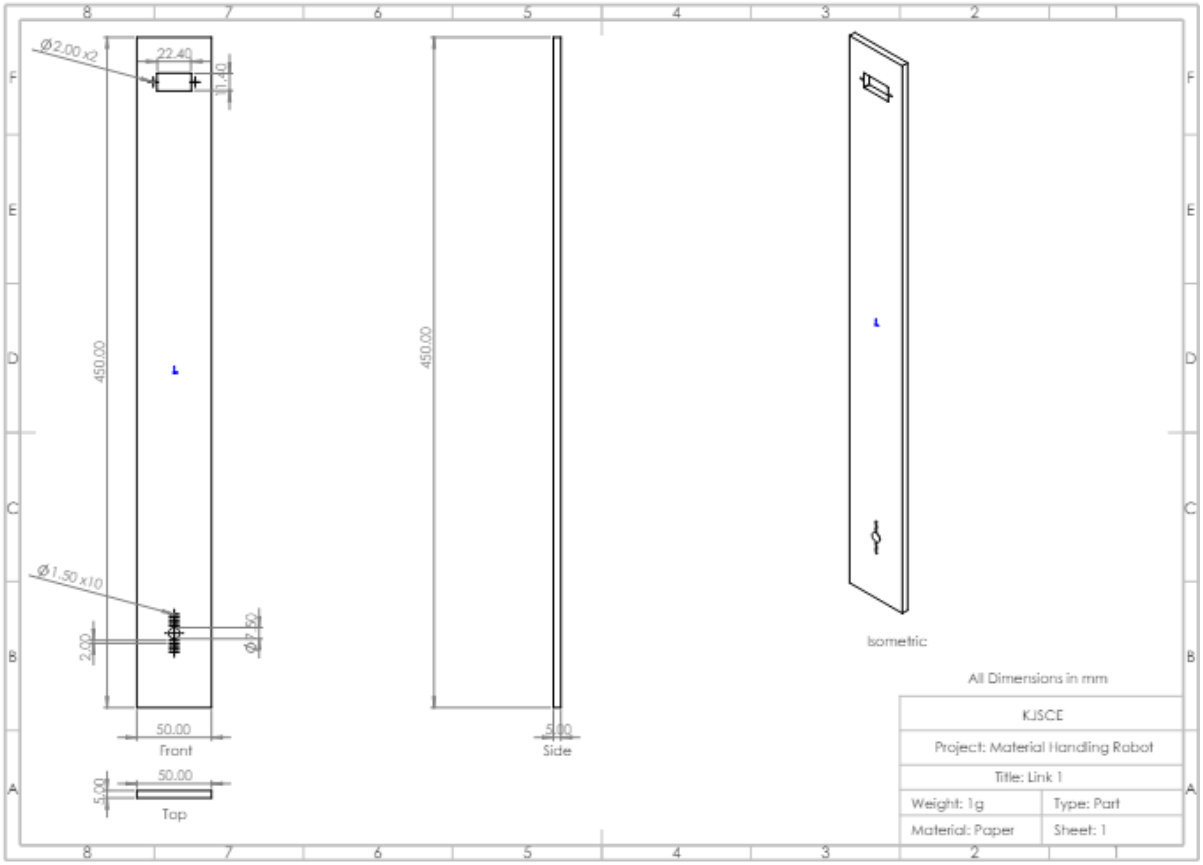

Fig. 3.12 The Drawing File of Link 1

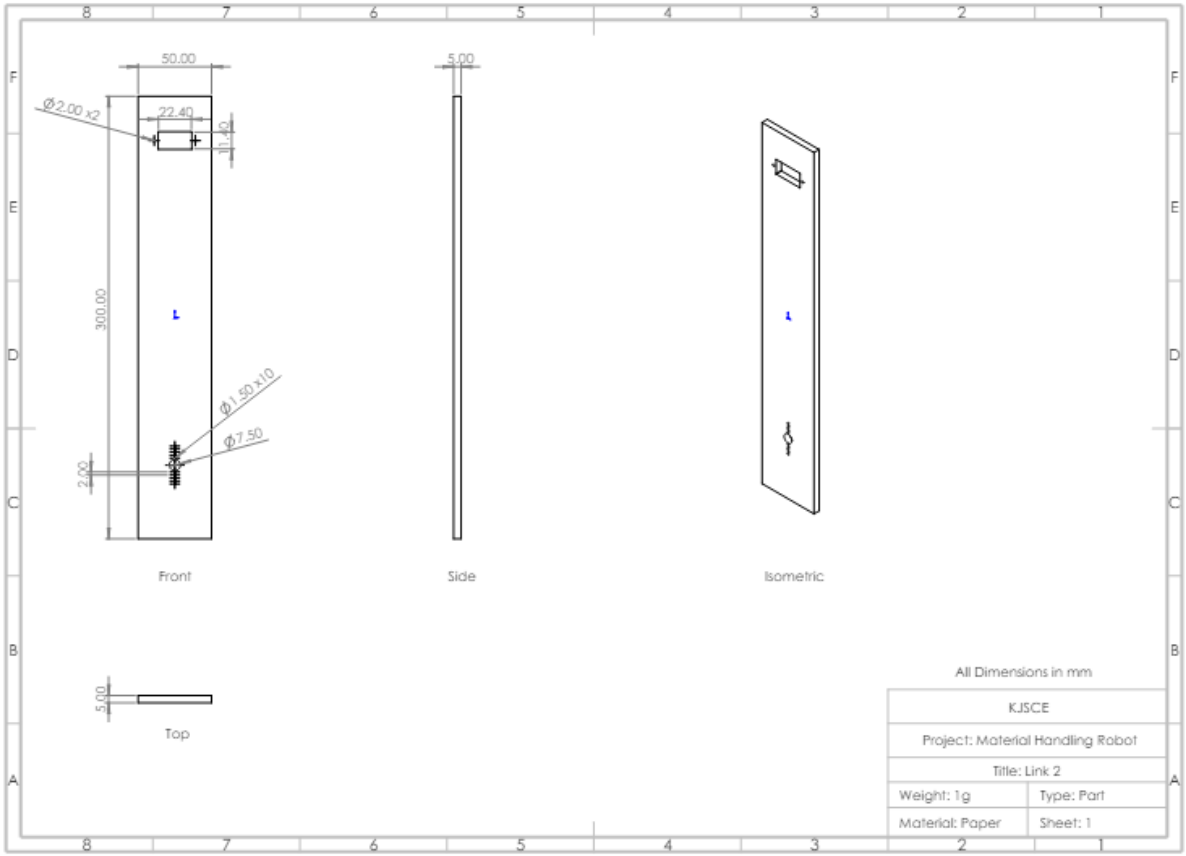

Fig. 3.13 The Drawing File of Link 2

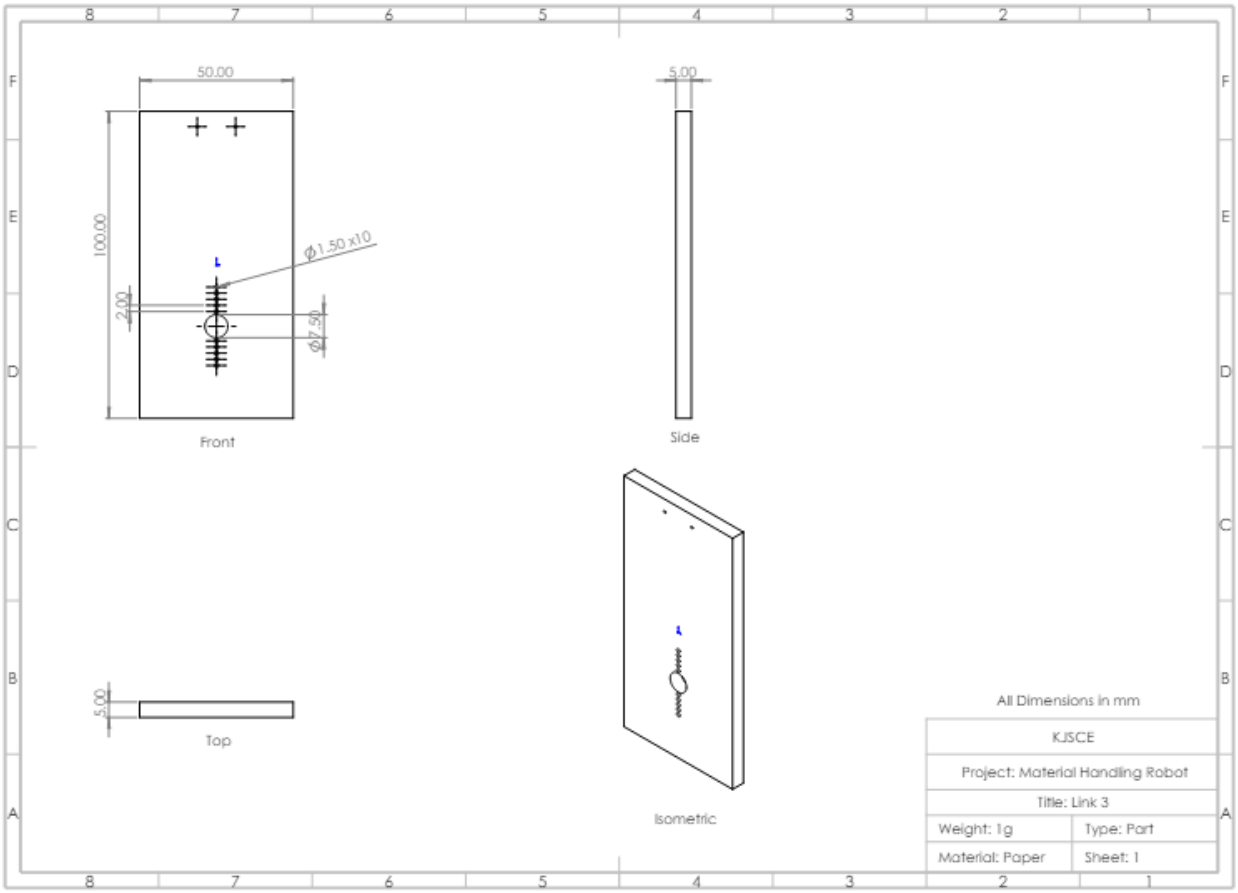

Fig. 3.14 The Drawing File of Link 3

C. Gripper

The gripper is the end effector of the robot arm. It has a metallic-plastic assembly with gears inside and a motor attached to it. It has two claws that can open and close with the movement of gears. As mentioned, the gripper has a DC gear motor of less RPM that powers its gear movement. This gripper will lift the respective material such as test tubes and perform the pick and place operation.

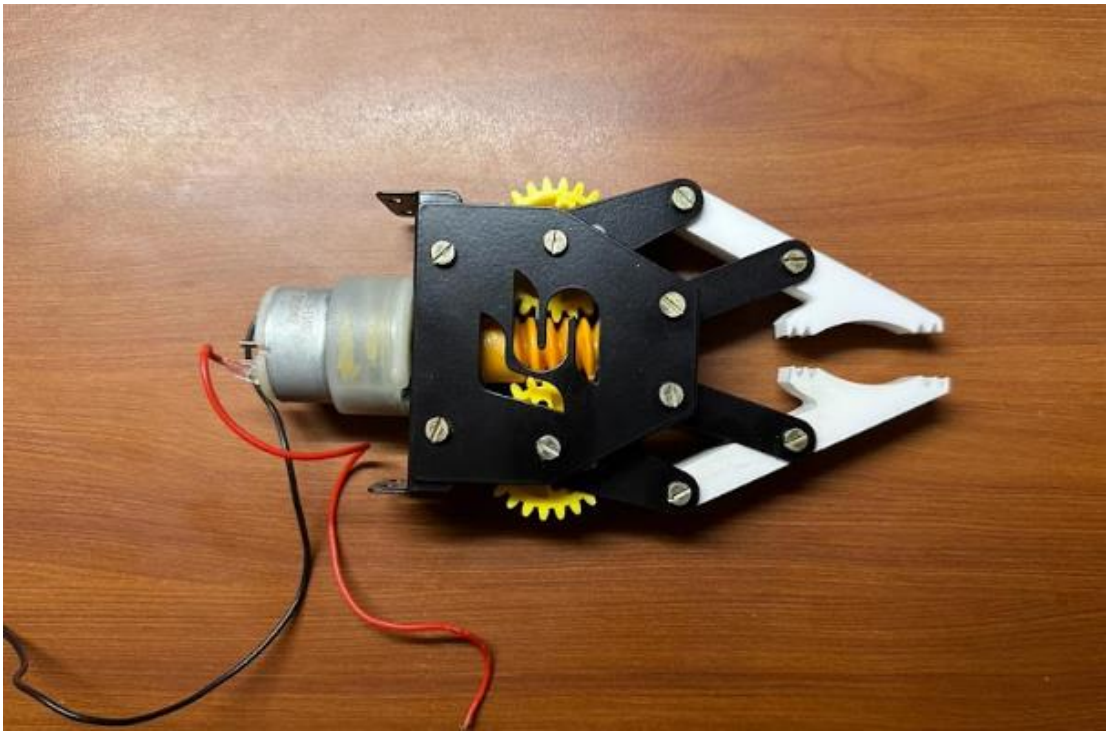

Fig. 3.15 The Gripper

D. Servo Motors

The servo motors used for the robot are rather very common amongst students. The model used here is the SG90 micro servo motor that can be found alongside various Arduino related electronics. These motors provide with revolute motion to the links. The properties of these motors include, lightweight, high torque, compatibility, small voltage requirement and quiet operation. In general, servo motors provide angular movement to the links that are attached to its shaft. The gear mechanisms inside these motors provide smooth motion and enough torque for operation. Six such motors have been used for this project and fixed on the respective links. These motors have been attached to the links with proper dimensions at the time of laser cutting as well as cutting motor brackets of the respective size for fixing it on the links.

Fig. 3.16 The SG90 Micro Servo Motor

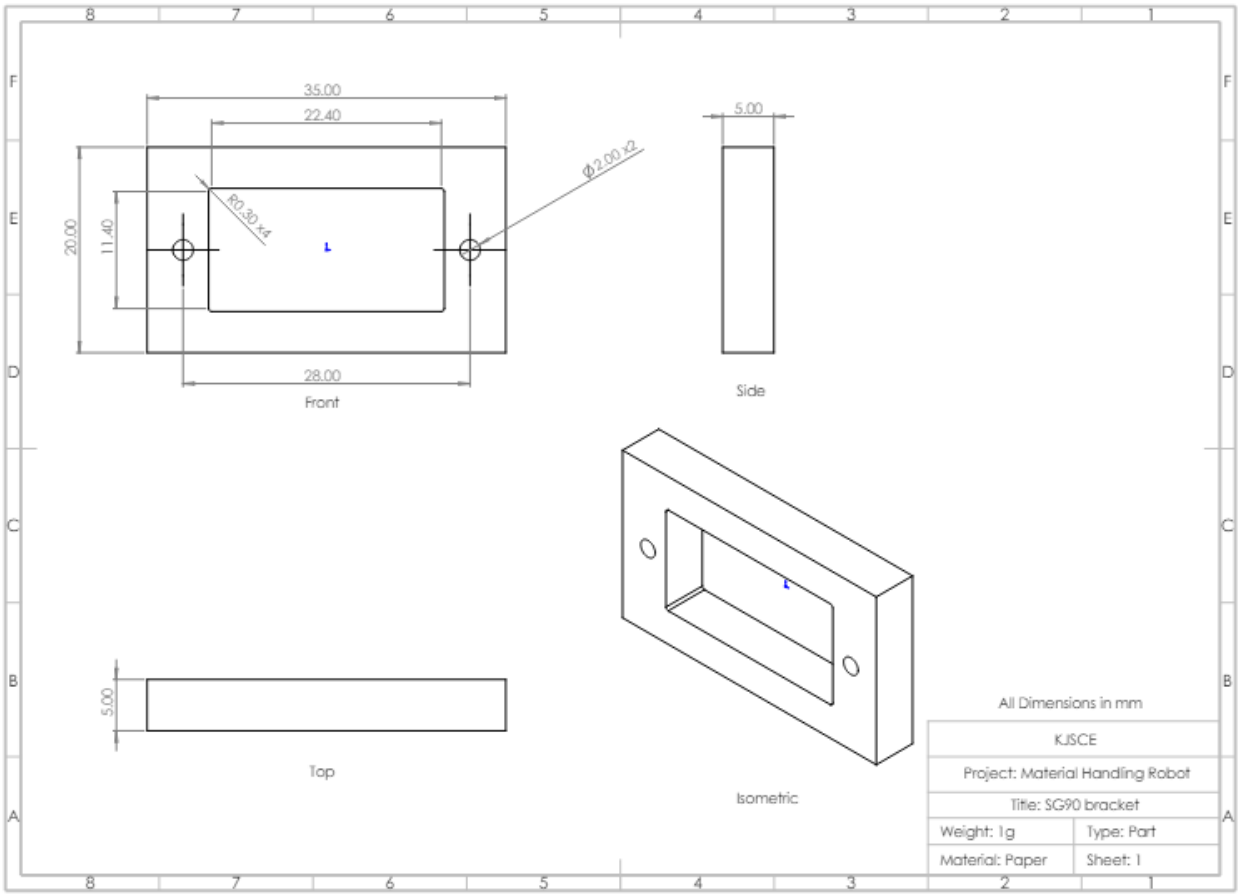

Fig. 3.17 The Drawing File of SG90 Bracket

E. Stepper Motors

A stepper motor has been used to provide free revolute motion at the base of the robot arm. This motor rotates in a series of small angular steps rather than continuous. The model used for this project is called NEMA 17 stepper motor. It has a comparatively small faceplate size of 1.7in. which makes it compatible for mounting on brackets. It has a small step angle of 1.8 degrees and provides a respective holding torque. It has a bipolar configuration and can be controlled simply by using H-bridge circuits. It has a higher torque and efficiency which makes it much popular amongst professionals. A coupling made of MS is available with this product that can be easily attached to the D-shaft of the motor. On this coupling, attached is the base of the robot arm. Further, to suit our requirements we were required to design a motor mount that can vertically attach this motor to the upper plywood. The mount had to be 3D printed for this purpose and we used the facility in the college to do so. A simple plastic material was used for this purpose. The rotation of the motor provides rotation to the robot arm base that is crucial for "place" function in the pick and place operation.

Fig. 3.18 The NEMA 17 Stepper Motor

Fig. 3.19 The NEMA 17 Coupling

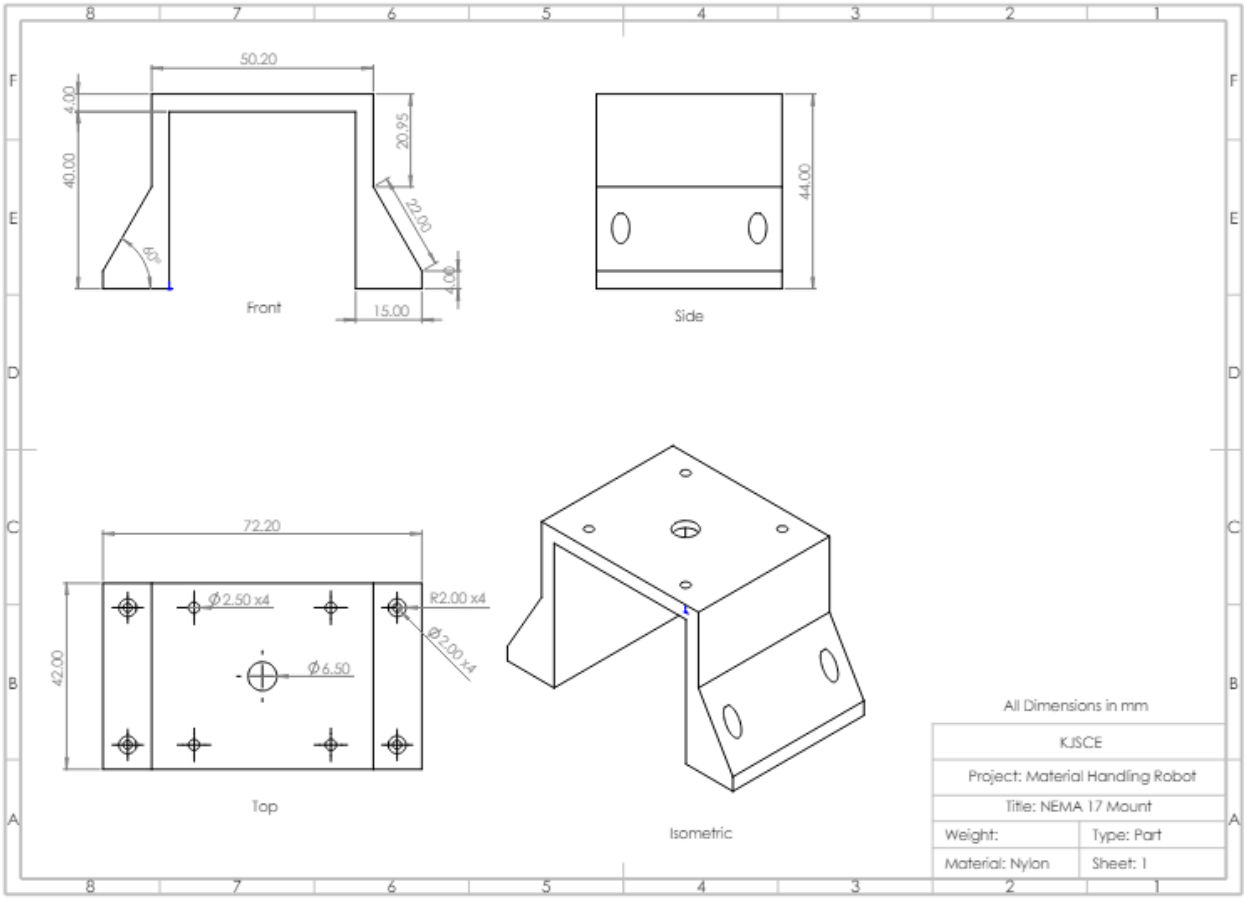

Fig. 3.20 NEMA 17 Motor Mount

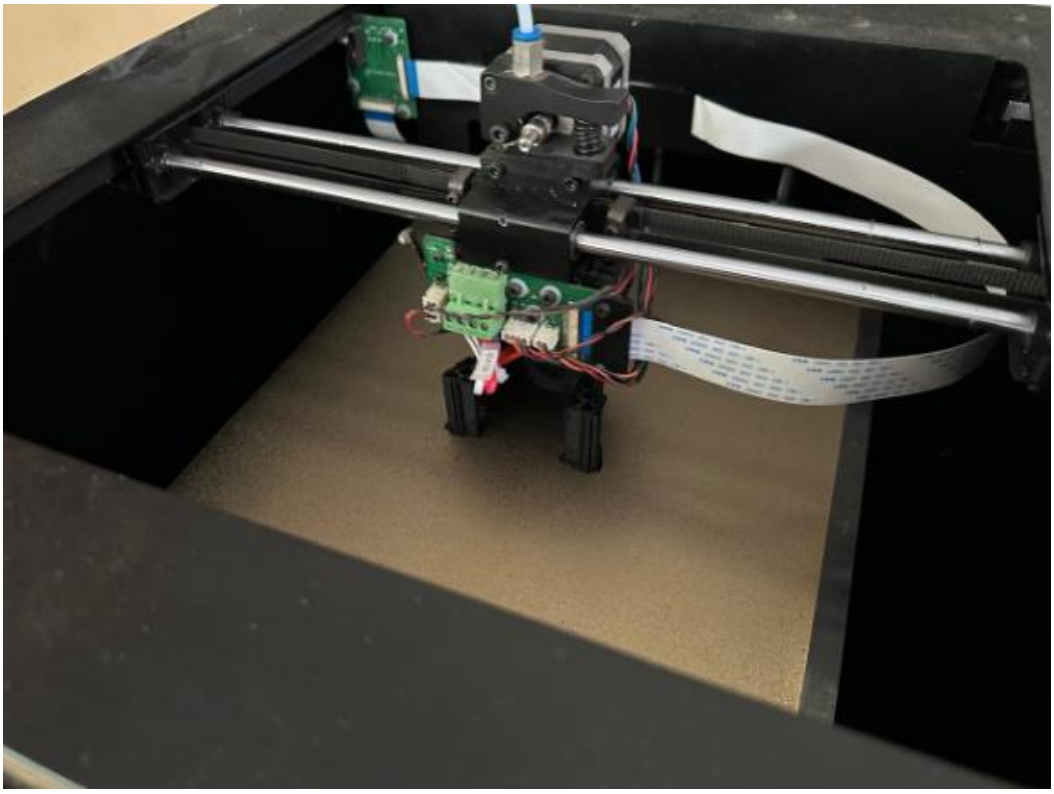

Fig. 3.21 3D Printing Process

3.5.3. Handling Equipment

A. Test tube stand

A test tube stand was used for the purpose of handling the material. It is placed behind the ply body just behind the arm. The material can be placed as well as picked from here.

Fig. 3.22 A Test tube stand

B. Test Tubes and other apparatus

The “material” that the robot will handle is a set of test tubes. They can be picked and placed by the robot with the help of the robot arm and handled in the tray. Besides the test tubes the other materials considered are flask, beaker, etc. that are smaller in sizes.

Fig. 3.23 Apparatus used for handling

3.6. Calculations

Some calculations have been performed for the working of the robot arm. While designing the 4 DOF arm, some parameters were considered such as joint angle (θ), joint distance (d), link length (a) and link twist angle (α). These parameters are altogether known as the kinematic parameters and can be used for calculating the direct as well as inverse kinematics of the robot arm. The result is an arm equation that can be used to calculate the arm matrix. The direct kinematics can be used to determine the position and orientation of the end effector, in this case the robot gripper while the inverse kinematics works entirely opposite as it is used to calculate the joint variables from the desired position and orientation of the end effector. Further, forces of the motors used in this robot were also calculated from its available torque rating. These forces are standard and are only calculated for the purpose of understanding how much load the motor can put for its respective job. The calculations have been given below in this text. A Kinematic Parameter Table (KPT) was formed for the purpose mentioned earlier in this text. Rest of the calculations have been done manually in rough form.

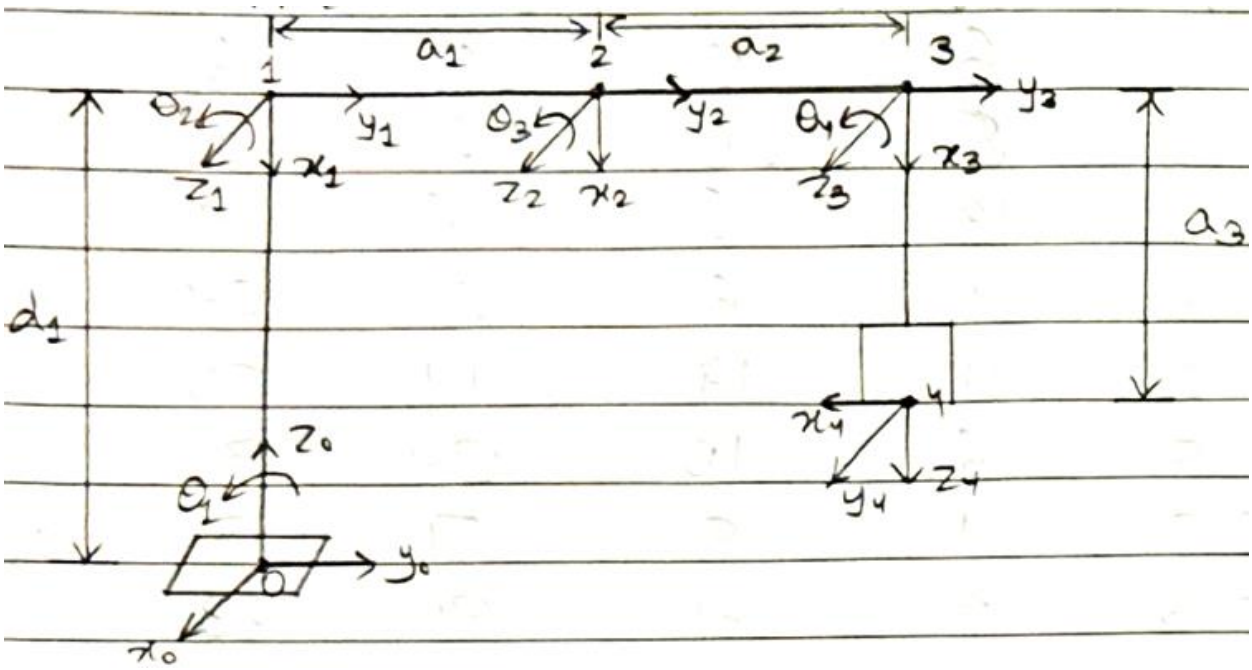

Fig. 3.24 Diagram of the 4 DOF arm

The numbers at joints have been assigned using the DH algorithm in the above diagram.

Table 3.2 The KPT of the arm

Axis	θ	d	α	a
1	θ1	d1	π/2	a1
2	θ2	0	0	a2
3	θ3	0	0	a3
4	θ4	0	π/2	0

The rest of the calculations have been done as follows:

A. Direct Kinematics

d1 = 100mm

a1 = 450mm

a2 = 300mm

a3 = 100mm

θ1 = 360

θ2 = 180

θ3 = 180

θ4 = 180

Arm Matrix, $Tk-1 = \begin{bmatrix} cos\theta k & -sin\theta kcos\alpha k & sin\theta ksin\alpha k & akcos\theta k \\ sin\theta k & cos\theta kcos\alpha k & -cos\theta ksin\alpha k & aksin\theta k \\ 0 & sin\alpha k & cos\alpha k & dk \\ 0 & 0 & 0 & 1 \end{bmatrix}$

Using this equation, we get the equations

$$T1 = \begin{bmatrix} 1 & 0 & 0 & 450 \\ 0 & 0 & -1 & 0 \\ 0 & 1 & 0 & 100 \\ 0 & 0 & 0 & 1 \end{bmatrix}$$

$$T2 = \begin{bmatrix} -1 & 0 & 0 & -300 \\ 0 & -1 & 0 & 0 \\ 0 & 0 & 1 & 0 \\ 0 & 0 & 0 & 1 \end{bmatrix}$$

$$T3 = \begin{bmatrix} -1 & 0 & 0 & -100 \\ 0 & -1 & 0 & 0 \\ 0 & 0 & 1 & 0 \\ 0 & 0 & 0 & 1 \end{bmatrix}$$

$$T4 = \begin{bmatrix} -1 & 0 & 0 & 0 \\ 0 & 0 & 1 & 0 \\ 0 & 1 & 0 & 0 \\ 0 & 0 & 0 & 1 \end{bmatrix}$$

According to Arm equation,

$$T = T1.T2.T3.T4$$

Substituting the above values,

$$T = \begin{bmatrix} -1 & 0 & 0 & 250 \\ 0 & -1 & 0 & 0 \\ 0 & 0 & 1 & 100 \\ 0 & 0 & 0 & 1 \end{bmatrix}$$

B. Inverse Kinematics

The tool configuration of robot arm can be given as below,

$$w(q) = [C1(a3C2C3 - a3S2S3 + a2C2 + a1)]$$
$$[S1(a3C2C3 - a3S2S3 + a2C2 + a1)]$$
$$[a3C3S2 + a3S3C2 + a2s2 + d1]$$
$$[\quad 0 \quad]$$
$$[\quad 0 \quad]$$
$$[\quad exp(q4/\pi) \quad]$$

The calculations for the joints are given as,

Shoulder joint,

$$w1 = C1(a3C2C3 - a3S2S3 + a2C2 + a1)$$
$$w2 = S1(a3C2C3 - a3S2S3 + a2C2 + a1)$$

Squaring and adding the above variables we find the value of θ2. Here, θ2 is the same as q2. Therefore,

$q2 = arccos\{[w1^2 + w2^2 - [a3C(2+3)]^2 - a1^2 - 2a1a3C(2+3)]/[a2[2a3C(2+3) + a2C2 + 2a1]\}$

Base joint,

$$w1 = C1[a3C(2+3) + a2C2 + a1]$$
$$w2 = S1[a3C(2+3) + a2C2 + a1]$$

Therefore,

$$C1 = w1/[a3C(2+3) + a2C2 + a1]$$
$$S1 = w2/[a3C(2+3) + a2C2 + a1]$$
$$T1 = S1/C1 = tan\theta 1$$

Since, θ1 is the same as q1 so,

$$q1 = arctan(w2/w1)$$

Elbow joint,

$$w3 = a3C3S2 + a3S3C2 + a2S2 + d1$$

Therefore,

$$q3 = w3$$

Wrist joint,

$$w6 = exp(q4/\pi)$$

Therefore,

$$q4 = \pi ln(w6)$$

C. Force Calculations of Motors

Stepper motor (Base),

τ = 4.8 kg-cm = 470.4 Nmm

r = 68.4 mm

F = τ/r = 6.877 N

Servo motor (Link1, Link2 and Link3),

τ = 1.3 kg-cm = 127.4 Nmm

r_1 = 400 mm

$F_1 = \tau/r_1$ = 0.3185 N

r_2 = 250 mm

$F_2 = \tau/r_2$ = 0.5096 N

r_3 = 70 mm

$F_3 = \tau/r_3$ = 1.82 N

Gear motor (Wheels, Gripper)

τ = 2 kg-cm = 196 Nmm

r_1 = 32.5 mm

$F_1 = \tau/r_1$ = 6.03 N

r_2 = 10 mm

$F_2 = \tau/r_2$ = 19.6 N

3.7. System Design

The robot makes use of the IoT technology in its system. The system is simple yet efficient enough to be operated. As stated earlier, we have made use of Arduino UNO R3 as the microcontroller for this project. Arduino has gained popularity among students for its easy functionality. It can be connected to your device such as a laptop and using a separate power supply. We operate the motors using Arduino. It can run using a simple programming language like C++ and it also requires a software called Arduino IDE, for running the program. The motors described in previous sections, were connected to the Arduino using accessories such as jumper wires, breadboard, etc. Two separate ICs called L293D dual H-bridge motor drivers have been used for operating the stepper motor and the gripper motor each. A L298N dual H-bridge motor driver has been used to operate the two DC motors of the wheels. The servo motors are directly connected

to the Arduino. A HC-05 bluetooth module has also been used to connect to the Arduino using wireless connection. An UI called “Arduino Bluetooth Controller”, a free application has been used to control the robot motors. The system design here is the simplest way to control a mechanism like MHR.

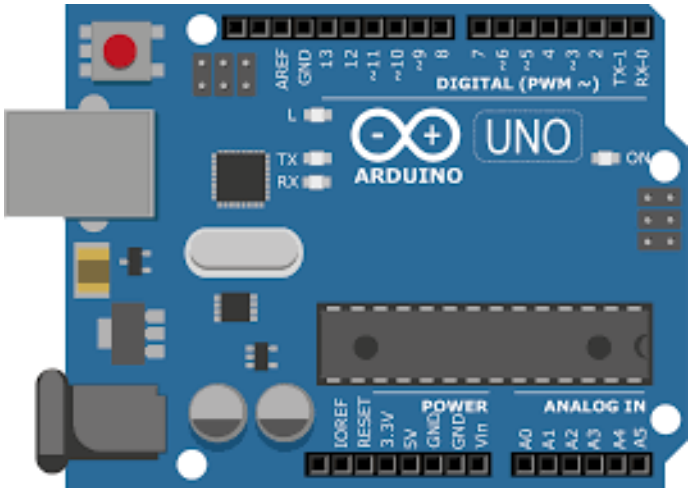

Fig. 3.25 An Arduino UNO R3 microcontroller

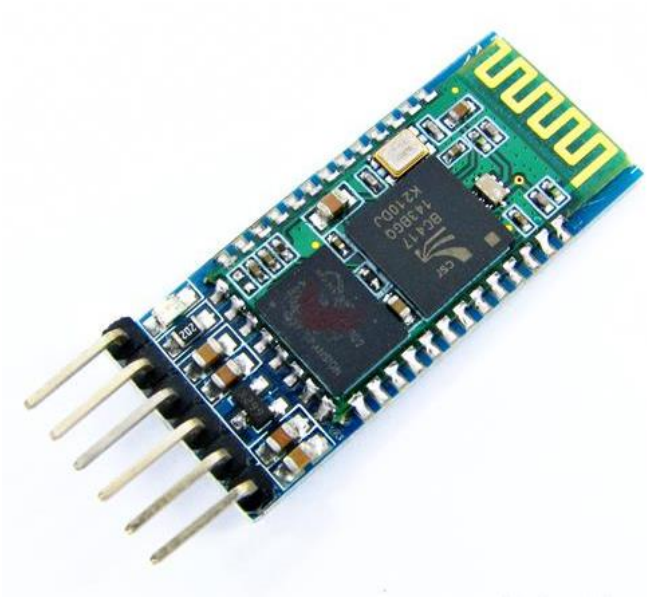

Fig. 3.26 A HC-05 Bluetooth module

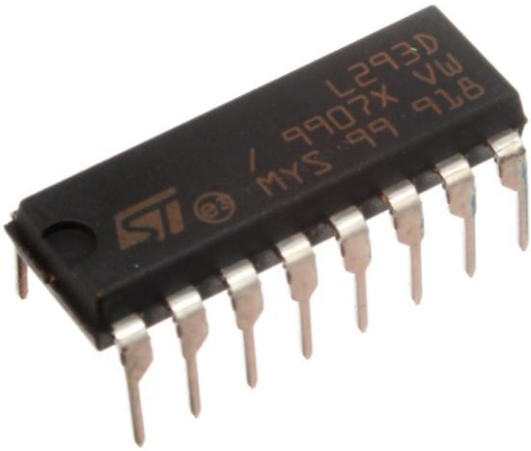

Fig. 3.27 A L293D motor driver

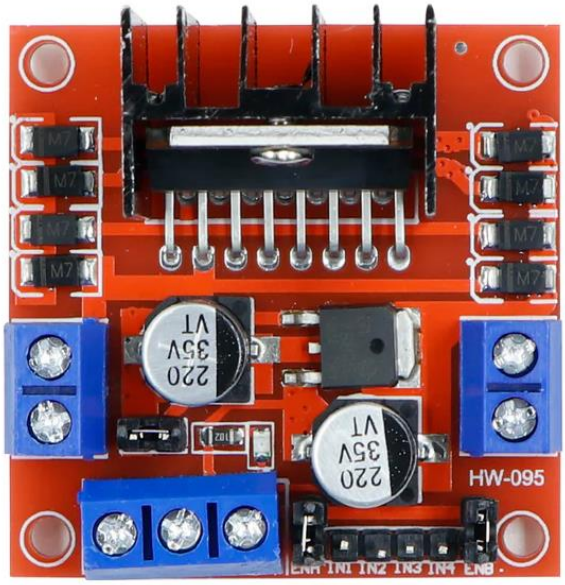

Fig. 3.28 A L298N motor driver

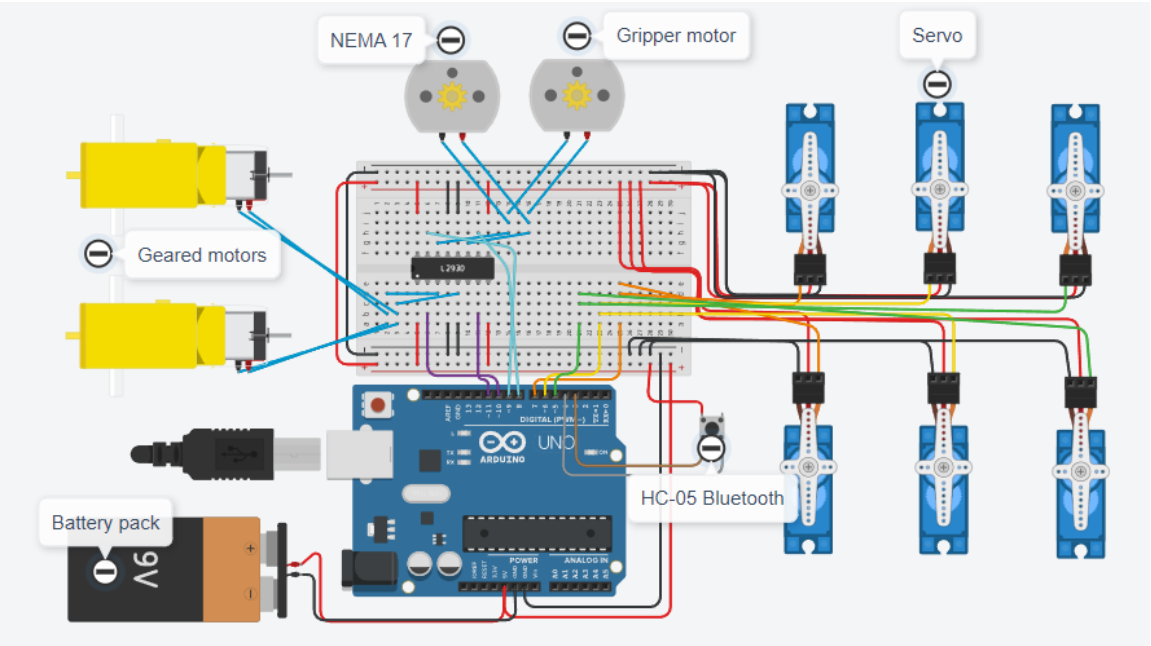

Fig. 3.29 Diagram of the circuit

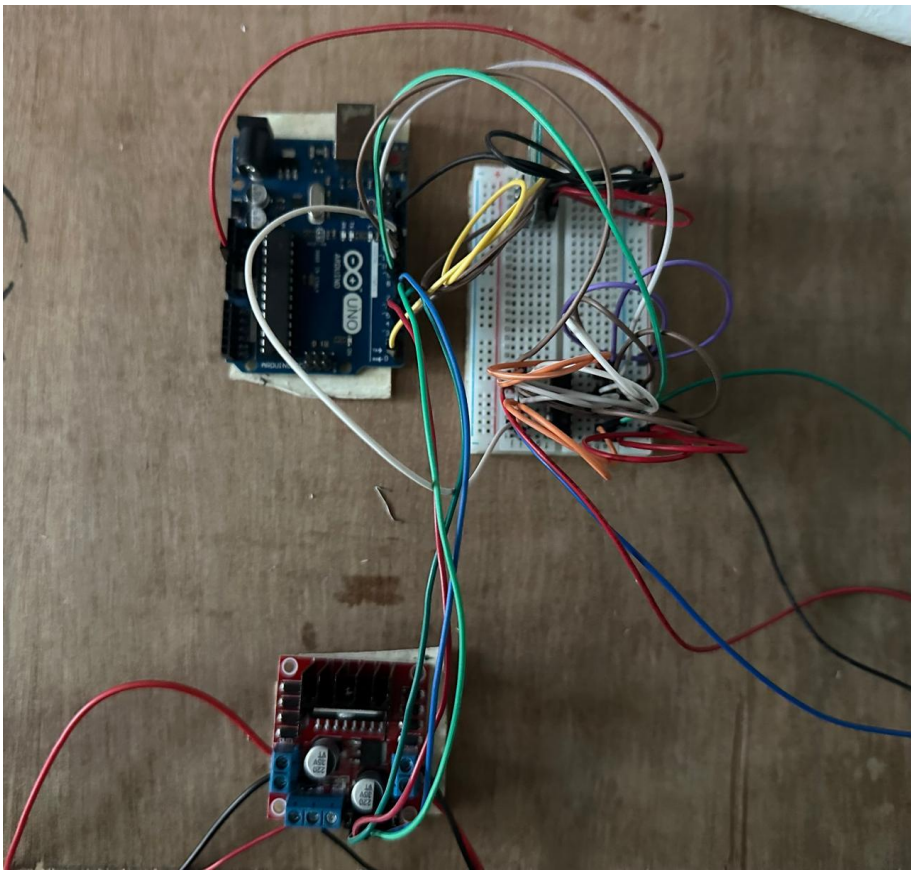

Fig. 3.30 Actual view of the circuit

Fig. 3.31 The UI of the Bluetooth application

Thus, this chapter gives a brief discussion about all the parts used in the project. Each part used has been explained with precision. The functionalities and uses have been explained too. Further, the system design has also been explained thoroughly throughout the sections of the chapter. The upcoming chapter discusses the most important information i.e. implementation and experimentation. Here, we will discuss the tests conducted, challenges encountered through the process and the results that were observed.

Chapter 4

Implementation and Experimentation

This chapter presents a practical implementation along with the explanation of the model.

4.1. Implementation

The implementation part here is basically the discussion of the code that has been used to operate the robot. As stated earlier, the code used was that of C++ and a software called Arduino IDE was used to run the code. The code is a simple one that defines the Bluetooth functionality as well as the motors like stepper, servo, and DC gear. The code used for this project is given below:

```
#include <SoftwareSerial.h>

#include <Servo.h>

SoftwareSerial bluetooth(0, 1); // Define Bluetooth Rx and Tx pins

Servo servos[6]; // Array to hold servo objects

int servoPins[] = {2, 3, 4, 5, 6, 7}; // Pins connected to servos

int gripper1 = 8; // Gripper pins

int gripper2 = 9;

int wheel1_2a = 10; // Wheel pins

int wheel1_2b = 11;

int step_pins[] = {12, 13, A0, A1}; // Stepper motor pins

int delay_time = 15; // Default delay time for stepper motor steps


void setup() {

  for (int i = 0; i < 6; i++) {

    servos[i].attach(servoPins[i]); // Attach servo objects to pins

  }

  pinMode(gripper1, OUTPUT);

  pinMode(gripper2, OUTPUT);
```

```
  pinMode(wheel1_2a, OUTPUT);
  pinMode(wheel1_2b, OUTPUT);
  for (int pin : step_pins) {
    pinMode(pin, OUTPUT); // Set stepper motor pins as output
  }
  Serial.begin(9600);
  bluetooth.begin(9600);
}

void loop() {
  if (bluetooth.available() >= 12) { // Check if all servo positions are available
    String servoData = bluetooth.readStringUntil('\n');
    int servoPositions[6];
    int posIndex = 0;
    char* token = strtok(const_cast<char*>(servoData.c_str()), ",");
    while (token != NULL) {
      servoPositions[posIndex++] = atoi(token);
      token = strtok(NULL, ",");
    }
    for (int i = 0; i < 6; i++) {
      servos[i].write(servoPositions[i]); // Set servo positions
    }
  }

  if (Serial.available()) {
    int value_bluetooth = Serial.parseInt(); // Read delay time for stepper motor
    if (value_bluetooth > 0) {
      delay_time = value_bluetooth;
    }
```

```
  }

  // Stepper motor sequence
  for (int i = 0; i < 4; i++) {
    digitalWrite(step_pins[i], HIGH);
    delay(delay_time);
    digitalWrite(step_pins[i], LOW);
  }

  // Read data for wheels
  int wh = bluetooth.read();
  if (wh > 0) {
    digitalWrite(wheel1_2a, HIGH);
    digitalWrite(wheel1_2b, LOW);
  } else {
    digitalWrite(wheel1_2a, LOW);
    digitalWrite(wheel1_2b, LOW);
  }

  // Read data for gripper
  int grip = bluetooth.read();
  if (grip > 0) {
    digitalWrite(gripper1, HIGH);
    digitalWrite(gripper2, LOW);
  } else {
    digitalWrite(gripper1, LOW);
    digitalWrite(gripper2, LOW);
  }
}
```

4.2. Testing

The testing phase of this project involved checking the working of the robot. Whether the robot can perform its objectives that were defined earlier in this report, were put to test. After we built the robot, we first tested the performance of the motor wheels. The motors worked fine here and being 1000 RPM motors they were fast enough to rotate. The rotation of the wheels would move the rest of the robot body in forward direction. After the wheels were tested, the next task was to check whether the trolley wheels were in moving condition. Since, the wheels used here were of light duty application, they were compatible with the rest of the robot body and did perform its job of providing support on the other side of the robot body. They would respond to the force that was applied from the motion of the front motor wheels. These observations were enough to indicate that the robot mobile body was in a state that was good enough for functioning.

The later tasks involved testing other motors. The servos were tested for their functioning and they provided sufficient torque at the time of their movement. The stepper motor was attached to the coupling and through its connections it also was able to rotate at the precise speed and required direction. The gripper was also able to perform its general task of open and closing. We also tested it with a dummy bottle like the size of the test tube to check whether it can grip the object or not. Finally, the Bluetooth connectivity was checked. The Bluetooth module was present and connected to the circuit for testing the “Arduino Bluetooth Controller” application. The module was successfully connected to the smartphone Bluetooth and the inputs given would reflect in the serial monitor of Arduino IDE.

Fig. 4.1 The MHR lifts the test tube

4.3. Challenges faced

Just like every typical project, ours too was ridden with difficulties and challenges. Initially, the design phase of the robot was not that challenging as we were designing based on the available data and resources. The first challenge was the unavailability of enough resources. It is to be noted that the topic of MHR has undergone very little research as this is still in R&D. Many companies have begun using MHRs for their respective tasks but they still have not automated their entire facilities. Most facilities are still under human supervision and require human interference in some or the other way. So, this was a major issue for us in the project life.

Major challenges emerged at the time of making an actual model. Many shops did not have the respective parts that we needed for project work. This only extended the timeline of the assembly. Furthermore, we also had to reframe our plans in between the assembly process because of the unavailability. At the end, we had to buy what was available in the market. This only created a level of uncertainty among us, as we continued to remain uncertain about the consequences that we might face in future. Managing the time for this project was not easy as we had to face delays due to changes that were created in the initial plans at various stages.

At the time of assembly, we noticed the certain drawbacks of the process that was followed. The weight factor of the project was a serious drawback as up till now we had only considered assumptions. The motors used began to show their performance under weight, that was something not up to our expectations. For example, the wheels would eventually show fatigue because of the constant weight of the robot body. Similarly, the stepper motor at the base of the robot arm started to show signs of sagging. We faced many such scenarios throughout the project. The table below only shows the major challenges that we faced and the solution that was used to overcome them.

Table 4.1 Major Challenges faced

No.	Challenges	Solutions
1	Lack of research available on the selected topic.	Designed the model using available research and had to consider assumptions regarding the topic.
2	Unavailability of the required parts.	Build the robot from what was available in the market.
3	Time consumption and delay in the assembly process.	Changed plans accordingly to adjust to complete the project on time.
4	Motor unable to take load at one point.	Had to limit the functionality of the robot by fixing it in a particular position.
5	Bluetooth connectivity issues and limitations of the application used.	Had to make changes in the code as per the situation incurred.

4.4. Results and discussion

Leaving aside the limitations that have occurred in this project, the MHR is still a reliable solution to the handling problems that occur in industries. Our project does have the capability to handle lightweight materials such as test tubes, showing that it can operate in environments that are either laboratory and similar facilities. The initial focus was to build a robot that would reduce the load on manual logistics through induction of automation in the process. We have built an MHR that can do so at a very low cost. From the start of the project, we tried making the robot as simple as possible in design. We made use of various techniques as well as technologies that have gained popularity amongst students in recent years. The use of IoT and its related accessories such as

Arduino, Bluetooth, etc. was one of the simplest ways that a robot could have been operated. Out of the various permutations and combinations that we tried for our project, this was the final track we chose to make our robot and showcase its functionality as well as results.

Table 4.2 Results as observed from testing

No.	Apparatus	Status	Handling	Remark
1	Small size test tube	Empty	Yes	Able to lift easily
2	Medium size test tube	Empty	Yes	Able to lift easily
3	Large size test tube	Empty	Yes	Able to lift easily
4	Beaker	Empty	Yes	Able to lift easily
5	Conical flask	Empty	Yes	Slight adjustment required due to shape of the object
6	Small size test tube	Filled	Yes	Able to lift easily
7	Medium size test tube	Filled	Yes	Able to lift easily
8	Large size test tube	Filled	Yes	Able to lift easily
9	Beaker	Filled	Yes	Able to lift easily
10	Conical flask	Filled	Yes	Slight adjustment required due to shape of the object

This chapter summarizes the important topics like experimentation and implementation, also giving insights about the same. The upcoming section is the final chapter that concludes this report and makes discussions regarding the future scope of the project.

Chapter 5

Conclusion and Further Work

This chapter presents the further work that can be done on this project topic along with the conclusion.

5.1. Conclusion

The project report delves into the fascinating realm of material handling robots especially within the chemical and pharmaceutical domain, illuminating their emergence to excel in a new era of automation as well as robotics. These robots are not only versatile but also highly customizable, capable of being programmed to perform a series of tasks tailored to the unique needs according to the requirements. As we investigate the upcoming new industrial revolution phase, marked by concepts such as the Internet of Things, we witness an unprecedented advancement of technology.

This report seeks to explore the profound implications of integrating material handling robots into various sections of these industries. From optimizing supply chain logistics to inventory control, these robots promise to revolutionize the way we approach such operations. By harnessing their capabilities, we can enhance efficiency, improve outcomes, and propel the industry into a future defined by innovation and progress.

By creating a MHR, equipped with an arm and handling equipment mounted on a mobile cart, we have taken a significant step towards realizing the vision of automation in medical environments. Making use of technologies like Arduino has shown us that there can be an easier and cheaper way to address such problems. This robot embodies the versatility and adaptability discussed earlier, offering a practical solution for streamlining material handling tasks within laboratories or similar facilities. As we continue to explore the diverse applications of material handling robots, including our own creation, we pave the way for a first step to introduce automation in material handling for such scenarios. With each innovation, we move closer to realizing the full potential of robotics in transforming our working environment.

5.2. Further Work

Every project can be improved in some or other way and so is the case of our project. Due to certain constraints we had to limit the materials that our robot would be able to handle. We had initially focused on building a robot that could operate in healthcare facilities but it had to be reduced only to laboratories. We made use of simple technology like Arduino for our purpose and here too there is a possibility of improvement. This project can be improved in a way that it can be operated in healthcare facilities. Improvements in design, addition of better parts, etc. can be used in this matter. With a better material selection and improvements in the overall structure of the robot, it can operate with better efficiency. Technologies such as Bluetooth are not the final draw as they can be replaced with other wireless technologies like ESP, which again is a technology in the sphere of IoT and tracks the data for real time. Various sensors can also be integrated in the design for a better view for the material handling.

As per the concepts that have been discussed in this report, the field of healthcare suits well for a robot with such design. It can handle chemical apparatus and help in transporting any hazardous material. The scope of this project is also open to the idea of handling even surgical instruments. Outside the health sector too, there are various ways in which this technology can be used. Since, the concept of material handling is there in every industry and so are the problems that come with it. Workshops, warehouses, factories, etc. require some level of handling and transportation of goods and materials. Such scenarios work for this robot where it is made to handle raw materials and assemble parts. Similarly for supply chain management, the robots make an entry to handle the logistics sector. Loading and unloading are the key tasks that can be performed by robots. There are further many applications like automobile assembly, agriculture, packaging, e-commerce, construction, and electronics. In the end, there is much scope for usage of robots in such fields for material handling. This report has a study that can be used as a base for working on MHRs, to make use of it for various material handling tasks across multiple industries.

This chapter marks the end of the project report titled “Material Handling Robot”. The references and other notes used in this report are given in the next sections.

Bibliography

[1] Bhosekar, Isık, Eksioglu, Gilstrap, Allen, "Simulation-Optimization of Automated Material Handling Systems in a Healthcare Facility," Cornell University, June 2020, DOI: 10.48550/arXiv.2006.10031

[2] Lu, Zhao, Huang, "Design and Implementation of Intelligent Material Handling Robot Based on STM32", ICIIP '21: Proceedings of the 6th International Conference on Intelligent Information Processing, July 2021, Pages 242–247, DOI: 10.1145/3480571.3480614

[3] Kolluru, Valavanis, Hebert, "Modeling, analysis, and performance evaluation of a robotic gripper system for limp material handling", IEEE Transactions on Systems, Man, and Cybernetics, Part B (Cybernetics) Volume: 28, Issue: 3, June 1998, DOI: 10.1109/3477.678660

[4] Bradt, Alfred, "Materials-handling systems: Automating of materials handling can integrate otherwise isolated islands of automated machine tools", IEEE Spectrum, Volume: 20, Issue: 5, May 1983, DOI: 10.1109/MSPEC.1983.6369910

[5] Nylander, Wallberg, Hansson, "Challenges for SMEs entering the IoT world: success is about so much more than technology", IoT '17: Proceedings of the Seventh International Conference on the Internet of Things, Article No.: 16, Pages 1–7, October 2017, DOI: 10.1145/3131542.3131547

[6] Kim, "Robots in Healthcare", Interactions, Volume 30, Issue 1, Pages 48–51, January 2023, DOI: 10.1145/3575871

[7] Eze, "Internet of Things Meets Robotics: A Survey of Cloud-based Robots", June 2023, DOI: 10.48550/arXiv.2306.02586

[8] Pradhan, Bharti, Chakravarty, Ray, Voinova, Bonartsev, Pal, "Internet of Things and Robotics in Transforming Current-Day Healthcare Services", Medical Internet of Things (IoT) Devices Volume 2021, May 2021, DOI: 10.1155/2021/9999504

[9] Villa, Song, Heim, Li, "Internet of Robotic Things: Current Technologies, Applications, Challenges and Future Directions", January 2021, DOI: 10.48550/arXiv.2101.06256

[10] Ponis, Efthymiou, "Cloud and IoT Applications in Material Handling Automation and Intralogistics", September 2020, DOI: 10.3390/logistics4030022

Acknowledgments

We would like to take a moment to acknowledge all those who contributed to the completion of the LY Project and its report titled "Material Handling Robot". Further, we would like to thank our project guide for guiding us throughout the duration of this project. Our collective efforts have improved the quality of this research and enriched the results presented in this report. This project report represents the culmination of the efforts and contributions of all contributors. Thank you for this opportunity.